Key: 10050

Town of Bourne - Fiscal Year 2024

12/18/2023 6:02 pm SEQ #: 10,280

LEGAL

CURRENT OWNER	PARCEL ID	LOCATION
DUBERGER DANIEL ERIC & STACEY EGAN DUBERGER TRS 31 ROBERTA AVE POCASSET, MA 02559	44.4-33-0	31 ROBERTA AVE

TRANSFER HISTORY	DOS	T	SALE PRICE	BK-PG (Cert)
DUBERGER DANIEL ERIC & ST	04/28/2003	F	100	16818-175
DUBERGER DANIEL ERIC ETUX	03/24/2003	F	100	16620-52
DUBERGER DANIEL ERIC & ST	01/25/1999	X		12014-25

CLASS	CLASS%	DESCRIPTION	BN ID	BN	CARD
1010	100	SINGLE FAMILY		1	1 of 1

PMT NO	PMT DT	TY	DESC	AMOUNT	INSP	BY	1st	%
980725	12/10/1998	3	ALT/RENO	20,000	10/07/1999	MS	100	100

LAND

CD	T	AC/SF/UN	Nbhd	Infl1	N_Index	ADJ BASE	SAF	Topo	Lpi	VC	CREDIT AMT	ADJ VALUE
100	S	8,030	11 1.00	100 1.00	100 1.00	282,840	3.83	A 1.00	PAV 1.20			199,470

TOTAL	8,015 SF	ZONING	1	FRNT	0

Nbhd	POC
Infl1	AVG
N_Index	AVG

NOTE: ALSO OWNS PARCELS 32 AND 27 WHICH CANNOT BE BUILT ON WITHOUT A NEW PLAN WHICH WOULD INCLUDE THIS LOT

ASSESSED	CURRENT	PREVIOUS
LAND	199,500	176,500
BUILDING	389,800	344,900
DETACHED	11,900	11,200
OTHER	0	0
TOTAL	**601,200**	**532,600**

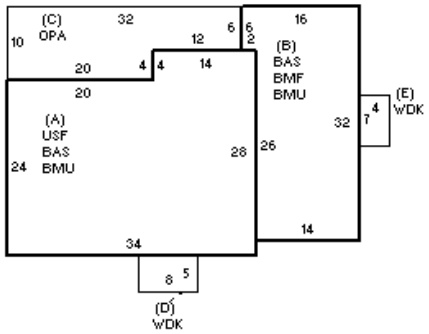

DETACHED

TY	QUAL	COND	DIM/NOTE	YB	UNITS	ADJ PRICE	RCNLD
DGF	A 1.00	A 0.75	14 X 19		266	46.93	9,400
SHF	A 1.00	A 0.75	12 X 18		216	15.23	2,500

PHOTO 05/17/2001

BLDG COMMENTS

BUILDING

BUILDING	CD	ADJ	DESC
MODEL	1		RESIDENTIAL
STYLE	5	1.00	COLONIAL [100%]
QUALITY	+	1.05	AVERAGE + [100%]
FRAME	1	1.00	WOOD FRAME [100%]

MEASURE	5/17/2001	EB
LIST	5/22/2001	EB
REVIEW	5/17/2001	EB

YEAR BLT	1960	SIZE ADJ	1.005
NET AREA	2,204	DETAIL ADJ	1.000
$NLA(RCN)	$221	OVERALL	1.040

CAPACITY	UNITS	ADJ
STORIES	2	1.00
ROOMS	8	1.00
BEDROOMS	4	1.00
BATHROOMS	2	1.00
FIXTURES	9	1.00
GARAGE CAPACITY	0	1.00
% BSMT FINISH	35	1.00
# OF HALF BATHS	0	1.00
# OF UNITS	1	1.00

ELEMENT	CD	DESCRIPTION	ADJ
FOUNDATION	4	FLR/WALL(FULL)	1.00
EXT COVER	1	WOOD SHINGLE	1.02
ROOF SHAPE	3	GAMBREL	1.00
ROOF COVER	1	ASPH/COMP SHIN	1.00
FLOOR COVER	3	W/W CARPET	1.00
INT. FINISH	2	DRYWALL	1.00
HEATING/COOLING	2	HOT WATER	1.02
FUEL SOURCE	2	GAS	1.00
USE	0		1.00

S	BAT	T	DESCRIPTION	UNITS	YB	ADJ PRICE	RCN
+	BMU	N	BSMT UNFINISHED	1,332		35.06	46,700
A	BAS	L	BASE AREA	872	1960	206.30	179,896
A	USF	L	UPPER STORY FIN	872	1999	118.14	103,020
B	BMF	N	BSMT FINISH	460		48.09	22,119
B	BAS	L	BASE AREA	460	1999	206.30	94,900
C	OPA	N	OPEN PORCH	272		64.59	17,568
+	WDK	N	WOOD DECK	68		58.89	4,005
	F21	O	FPL 2S 1OP	1		9,667.50	9,668
	FIX	O	XTRA FIXTURES	4		2,337.05	9,348

TOTAL RCN	487,223

CONDITION ELEM	CD
EXTERIOR	A
INTERIOR	A
KITCHEN	A
BATHS	A
HEAT	A
ELECT	A

EFF.YR/AGE	1999 / 23		
COND	20	20 %	
FUNC	0		
ECON	0		
DEPR	20	% GD	80
RCNLD			$389,800