Key: 10195

Town of Bourne - Fiscal Year 2024

12/18/2023 6:02 pm SEQ #: 10,429

LEGAL

CURRENT OWNER	PARCEL ID	LOCATION
MCCARTHY CHRISTOPHER &	47.1-51-0	100 CEDAR POINT DR
KAREN J MCCARTHY		
755 LAKEVIEW AVE		
LOWELL, MA 01850		

TRANSFER HISTORY	DOS	T	SALE PRICE	BK-PG (Cert)
MCCARTHY CHRISTOPHER &	05/15/2020	F	1	32910-119
MCCARTHY CHRISTOPHER D &	01/06/2015	F	1	28613-283
MCCARTHY CHRISTOPHER	02/01/2013	U	600,000	27097-247

CLASS	CLASS%	DESCRIPTION	BN ID	BN	CARD
1010	100	SINGLE FAMILY		1	1 of 1

PMT NO	PMT DT	TY	DESC	AMOUNT	INSP	BY	1st	%
EXB-22-206	04/11/2022	15	INSULATE/WEA	638			100	100
16781	09/13/2016	14	SOLAR	54,000			100	100
15241	04/17/2015	3	ALT/RENO	65,000			100	100

LAND

CD	T	AC/SF/UN	Nbhd	Infl1	N_Index	ADJ BASE	SAF	Topo	Lpi	VC	CREDIT AMT	ADJ VALUE
100	S	21,400	11 1.00	100 1.00	100 1.00	1,414,200	1.62	A 1.00	BSP 6.00			1,123,220

TOTAL	21,388 SF	ZONING	1	FRNT	0

Nbhd	POC
Infl1	AVG
N_Index	AVG

NOTE: Listing states - Private beach, overlooking Hen's Cove & Patuisset Island

ASSESSED	CURRENT	PREVIOUS
LAND	1,123,200	994,100
BUILDING	463,700	350,100
DETACHED	3,300	0
OTHER	0	0
TOTAL	**1,590,200**	**1,344,200**

DETACHED

TY	QUAL	COND	DIM/NOTE	YB	UNITS	ADJ PRICE	RCNLD
SHF	G 1.20	10 0.90	10 X 10		100	20.28	1,800
PTD	G 1.20	10 0.90	18 X 19		342	4.79	1,500

PHOTO 09/08/2023

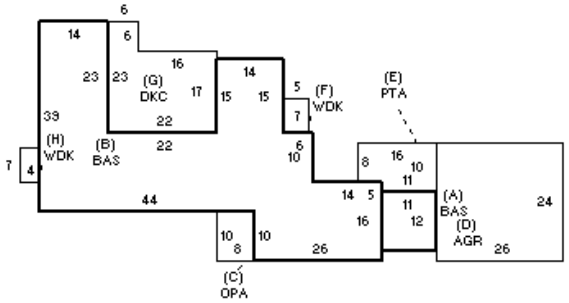

BLDG COMMENTS

BUILDING

BUILDING	CD	ADJ	DESC
MODEL	1		RESIDENTIAL
STYLE	1	0.95	RANCH [100%]
QUALITY	+	1.05	AVERAGE + [100%]
FRAME	1	1.00	WOOD FRAME [100%]

MEASURE	9/8/2023	SL
LIST	9/8/2023	EST
REVIEW	9/8/2023	SL

YEAR BLT	1954	SIZE ADJ	1.010
NET AREA	1,904	DETAIL ADJ	1.000
$NLA(RCN)	$244	OVERALL	1.010

CAPACITY	UNITS	ADJ
STORIES	1	1.00
ROOMS	5	1.00
BEDROOMS	3	1.00
BATHROOMS	2	1.00
FIXTURES	10	1.00
GARAGE CAPACITY	2	1.00
% BSMT FINISH	0	1.00
# OF HALF BATHS	0	1.00
# OF UNITS	1	1.00

ELEMENT	CD	DESCRIPTION	ADJ
FOUNDATION	1	PIER	1.00
EXT COVER	1	WOOD SHINGLE	1.02
ROOF SHAPE	4	FLAT/ SHED	1.00
ROOF COVER	8	TAR & GRAVEL	1.00
FLOOR COVER	1	HARDWOOD	1.02
INT. FINISH	2	DRYWALL	1.00
HEATING/COOLING	2	HOT WATER	1.02
FUEL SOURCE	2	GAS	1.00
USE	0		1.00

S	BAT	T	DESCRIPTION	UNITS	YB	ADJ PRICE	RCN
A	BAS	L	BASE AREA	132	1954	189.71	25,041
B	BAS	L	BASE AREA	1,772	1954	189.71	336,165
C	OPA	N	OPEN PORCH	80		76.97	6,158
D	AGR	N	ATT GARAGE	624		62.27	38,855
E	PTA	N	PATIO	150		15.30	2,295
+	WDK	N	WOOD DECK	63		57.48	3,621
G	DKC	N	DECK-COMPOSITE	410		67.25	27,574
	CPC	O	CAPE CELLAR	1		4,044.50	4,045
	F11	O	FPL 1S 1OP	1		8,588.10	8,588
	FIX	O	XTRA FIXTURES	5		2,281.02	11,405

TOTAL RCN	463,748

CONDITION ELEM	CD
EXTERIOR	V
INTERIOR	V
KITCHEN	V
BATHS	V
HEAT	U
ELECT	U

EFF.YR/AGE	2021 / 1	
COND	1 1 %	
FUNC	0	
ECON	0	
DEPR	0	% GD 100
RCNLD		$463,700