Key: 10202

Town of Bourne - Fiscal Year 2024

12/18/2023 6:02 pm SEQ #: 10,436

LEGAL

CURRENT OWNER	PARCEL ID	LOCATION
CERRETANI RICHARD D & ANNE TR C & C FAMILY TRUST PO BOX 868 POCASSET, MA 02559-0868	47.1-58-0	50 SPRUCE DR

TRANSFER HISTORY	DOS	T	SALE PRICE	BK-PG (Cert)
CERRETANI RICHARD D & ANN	01/13/2015	F	1	28628-226
CERRETANI RICHARD D &		XX		02537-0073

CLASS	CLASS%	DESCRIPTION	BN ID	BN	CARD
1010	100	SINGLE FAMILY		1	1 of 1

PMT NO	PMT DT	TY	DESC	AMOUNT	INSP	BY	1st	%
04705	09/15/2004	3	ALT/RENO	4,000	11/17/2004	TL	100	100

LAND

CD	T	AC/SF/UN	Nbhd	Infl1	N_Index	ADJ BASE	SAF	Topo	Lpi	VC	CREDIT AMT	ADJ VALUE
100	S	16,320	11 1.00	100 1.00	100 1.00	659,960	2.03	A 1.00	HCG 2.80			501,860

TOTAL	16,335 SF	ZONING	1	FRNT	0

Nbhd	POC
Infl1	AVG
N_Index	AVG

NOTE: 6/18; Waterview exists - LPI to HCG-Hens Cove waterview

ASSESSED	CURRENT	PREVIOUS
LAND	501,900	444,200
BUILDING	301,300	266,600
DETACHED	0	0
OTHER	0	0
TOTAL	**803,200**	**710,800**

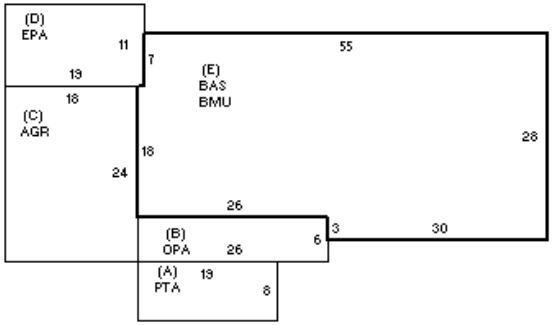

DETACHED

TY	QUAL	COND	DIM/NOTE	YB	UNITS	ADJ PRICE	RCNLD

PHOTO 11/17/2004

BLDG COMMENTS

BUILDING

BUILDING	CD	ADJ	DESC
MODEL	1		RESIDENTIAL
STYLE	1	0.95	RANCH [100%]
QUALITY	A	1.00	AVERAGE [100%]
FRAME	1	1.00	WOOD FRAME [100%]

MEASURE	11/17/2004	TL
LIST	11/17/2004	TL
REVIEW	2/9/2018	KT

YEAR BLT	1968	SIZE ADJ	1.015
NET AREA	1,483	DETAIL ADJ	1.000
$NLA(RCN)	$260	OVERALL	0.990

CAPACITY	UNITS	ADJ
STORIES	1	1.00
ROOMS	6	1.00
BEDROOMS	3	1.00
BATHROOMS	1	1.00
FIXTURES	7	1.00
GARAGE CAPACITY	0	1.00
% BSMT FINISH	0	1.00
# OF HALF BATHS	1	1.00
# OF UNITS	1	1.00

ELEMENT	CD	DESCRIPTION	ADJ
FOUNDATION	4	FLR/WALL(FULL)	1.00
EXT COVER	1	WOOD SHINGLE	1.02
ROOF SHAPE	1	GABLE	1.00
ROOF COVER	1	ASPH/COMP SHIN	1.00
FLOOR COVER	3	W/W CARPET	1.00
INT. FINISH	2	DRYWALL	1.00
HEATING/COOLING	2	HOT WATER	1.02
FUEL SOURCE	2	GAS	1.00
USE	0		1.00

S	BAT	T	DESCRIPTION	UNITS	YB	ADJ PRICE	RCN
A	PTA	N	PATIO	152		14.18	2,155
B	OPA	N	OPEN PORCH	156		65.68	10,246
C	AGR	N	ATT GARAGE	432		62.11	26,830
D	EPA	N	ENCLOSED PORCH	209		65.55	13,700
E	BMU	N	BSMT UNFINISHED	1,483		32.10	47,607
E	BAS	L	BASE AREA	1,483	1968	184.34	273,383
	F11	O	FPL 1S 1OP	1		8,056.90	8,057
	FIX	O	XTRA FIXTURES	2		2,139.85	4,280

TOTAL RCN 386,256

CONDITION ELEM	CD
EXTERIOR	G
INTERIOR	A
KITCHEN	A
BATHS	A
HEAT	A
ELECT	A

EFF.YR/AGE 1997 / 25

COND	22	22 %	
FUNC	0		
ECON	0		
DEPR	22	% GD	78

RCNLD $301,300