Key: 10240

Town of Bourne - Fiscal Year 2024

12/18/2023 6:02 pm SEQ #: 10,476

LEGAL

CURRENT OWNER	PARCEL ID	LOCATION
MASIELLO WILLIAM & ANGELA **PO BOX 503** **POCASSET, MA 02559**	**47.1-97-0**	**98 ELGIN RD**

TRANSFER HISTORY	DOS	T	SALE PRICE	BK-PG (Cert)
MASIELLO WILLIAM & ANGELA	10/31/2018	QS	299,900	31633-18
KILMAN SYBIL S	05/02/2017	F		30459-344
KLIMAN MORTON I &		XX		01551-0073

CLASS	CLASS%	DESCRIPTION	BN ID	BN	CARD
1010	**100**	**SINGLE FAMILY**		**1**	**1 of 1**

PMT NO	PMT DT	TY	DESC	AMOUNT	INSP	BY	1st	%
20048	01/16/2020	1	NEW CONSTRUC	550,000	02/10/2021	TL	100	100
SS19		11	SPLITS/SUBS	231,200	01/01/2018	KT	100	100
H307		1	NEW CONSTRUC				100	100

LAND

CD	T	AC/SF/UN	Nbhd	Infl1	N_Index	ADJ BASE	SAF	Topo	Lpi	VC	CREDIT AMT	ADJ VALUE
100	S	18,992	14 1.00	100 1.00	100 1.00	707,100	1.78	25 0.75	BGD 4.00			550,270

TOTAL	18,992 SF	ZONING	1	FRNT	0
Nbhd	CATAUMET	NOTE	fy19 - land changed to developable per bldg inspector (see attached doc in pk) BC		
Infl1	AVG				
N_Index	AVG				

ASSESSED	CURRENT	PREVIOUS
LAND	550,300	454,500
BUILDING	809,100	715,900
DETACHED	0	0
OTHER	0	0
TOTAL	**1,359,400**	**1,170,400**

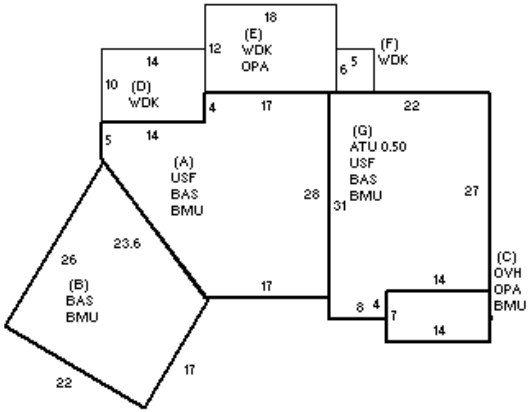

DETACHED

TY	QUAL	COND	DIM/NOTE	YB	UNITS	ADJ PRICE	RCNLD

PHOTO 06/07/2021

BLDG COMMENTS

BUILDING

BUILDING	CD	ADJ	DESC
MODEL	1		RESIDENTIAL
STYLE	8	1.10	CONTEMPORARY [100%]
QUALITY	G	1.10	GOOD [100%]
FRAME	1	1.00	WOOD FRAME [100%]

MEASURE	6/9/2020	RP
LIST	6/11/2020	EST
REVIEW	11/14/2023	RP

YEAR BLT	2020	SIZE ADJ	0.995
NET AREA	3,181	DETAIL ADJ	1.000
$NLA(RCN)	$254	OVERALL	1.190

CAPACITY	UNITS	ADJ
STORIES	2.5	1.00
ROOMS	7	1.00
BEDROOMS	4	1.00
BATHROOMS	3	1.00
FIXTURES	15	1.00
GARAGE CAPACITY	2	1.00
% BSMT FINISH	0	1.00
# OF HALF BATHS	0	1.00
# OF UNITS	1	1.00

ELEMENT	CD	DESCRIPTION	ADJ
FOUNDATION	4	FLR/WALL(FULL)	1.00
EXT COVER	1	WOOD SHINGLE	1.02
ROOF SHAPE	2	HIP	1.02
ROOF COVER	1	ASPH/COMP SHIN	1.00
FLOOR COVER	1	HARDWOOD	1.02
INT. FINISH	1	PLASTER	1.00
HEATING/COOLING	9	WARM-COOL AIR	1.03
FUEL SOURCE	2	GAS	1.00
USE	0		1.00

S	BAT	T	DESCRIPTION	UNITS	YB	ADJ PRICE	RCN
+	BMU	N	BSMT UNFINISHED	1,876		38.62	72,452
+	BAS	L	BASE AREA	1,778	2020	230.69	410,159
+	USF	L	UPPER STORY FIN	1,305	2020	135.41	176,715
C	OVH	L	OVERHANG	98	2020	235.88	23,116
+	WDK	N	WOOD DECK	386		27.82	10,739
+	OPA	N	OPEN PORCH	314		76.65	24,069
G	ATU	N	ATTIC UNF	313		55.05	17,230
	SOL	N	SOLARIUM	108		133.77	14,447
	WDK	N	WOOD DECK	96		57.31	5,502
	BMG	O	BSMT GARAGE	2		9,283.90	18,568
	FIX	O	XTRA FIXTURES	10		2,773.71	27,737
	GFP	O	GAS FIREPLACE	1		8,335.70	8,336

TOTAL RCN	809,068

CONDITION ELEM	CD
EXTERIOR	A
INTERIOR	A
KITCHEN	A
BATHS	A
HEAT	A
ELECT	A

EFF.YR/AGE	2021 / 1		
COND	1 1 %		
FUNC	0		
ECON	0		
DEPR	0	% GD	100
RCNLD	$809,100		