Key: 10254

Town of Bourne - Fiscal Year 2024

12/18/2023 6:02 pm SEQ #: 10,490

LEGAL

CURRENT OWNER	PARCEL ID	LOCATION
CROWLEY SUSAN & SCOTT CROWLEY PO BOX 134 POCASSET, MA 02559	47.1-111-0	80 ELGIN RD

TRANSFER HISTORY	DOS	T	SALE PRICE	BK-PG (Cert)
CROWLEY SUSAN &	03/15/2017	O	650,000	30349-73
KLIMAN MORTON &	09/04/1970	XX		1483-645

CLASS	CLASS%	DESCRIPTION	BN ID	BN	CARD
1010	100	SINGLE FAMILY		1	1 of 1

PMT NO	PMT DT	TY	DESC	AMOUNT	INSP	BY	1st	%
E-21-311	04/27/2021	3	ALT/RENO	5,000			100	100
B-21-46	02/04/2021	8	POOL	33,600	04/27/2022		100	100
EXB-20-542	12/22/2020	6	FENCE	10,000			100	100
SR-20-37	10/20/2020	4	DETACH.STRUC	6,000	11/09/2020		100	100
18004	01/02/2018	2	ADDITIONS	34,500	07/10/2018	TL	100	100

LAND

CD	T	AC/SF/UN	Nbhd	Infl1	N_Index	ADJ BASE	SAF	Topo	Lpi	VC	CREDIT AMT	ADJ VALUE
100	S	19,418	14 1.00	100 1.00	100 1.00	942,800	1.75	A 1.00	BGD 4.00			736,370

TOTAL	19,428 SF	ZONING	1	FRNT	0

Nbhd	CATAUMET
Infl1	AVG
N_Index	AVG

NOTE: ALSO OWNS CONTIGUOUS PCL 97 - WHICH IS UNBUILDABLE

ASSESSED	CURRENT	PREVIOUS
LAND	736,400	456,200
BUILDING	487,600	451,800
DETACHED	27,300	25,900
OTHER	0	0
TOTAL	**1,251,300**	**933,900**

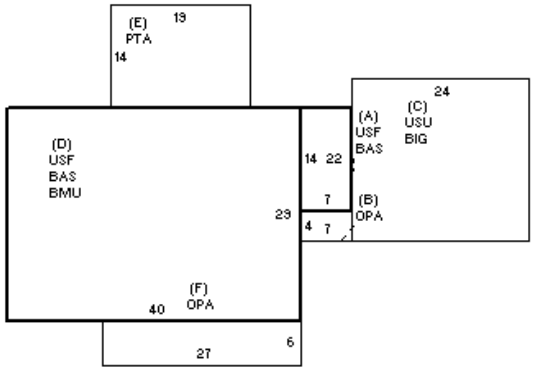

DETACHED

TY	QUAL	COND	DIM/NOTE	YB	UNITS	ADJ PRICE	RCNLD
SHF	V 1.30	10 0.90	12 X 16	2020	192	20.73	3,600
IPG	E 1.90	10 0.90	14 X 28	2021	392	67.08	23,700

PHOTO 07/10/2018

BLDG COMMENTS

BUILDING

BUILDING	CD	ADJ	DESC
MODEL	1		RESIDENTIAL
STYLE	5	1.00	COLONIAL [100%]
QUALITY	+	1.05	AVERAGE + [100%]
FRAME	1	1.00	WOOD FRAME [100%]

MEASURE	3/27/2018	TL
LIST	3/27/2018	EST
REVIEW	11/14/2023	RP

YEAR BLT	1968	SIZE ADJ	1.000
NET AREA	2,516	DETAIL ADJ	1.000
$NLA(RCN)	$228	OVERALL	1.060

CAPACITY	UNITS	ADJ
STORIES	2	1.00
ROOMS	7	1.00
BEDROOMS	4	1.00
BATHROOMS	2	1.00
FIXTURES	12	1.00
GARAGE CAPACITY	0	1.00
% BSMT FINISH	0	1.00
# OF HALF BATHS	1	1.00
# OF UNITS	1	1.00

ELEMENT	CD	DESCRIPTION	ADJ
FOUNDATION	4	FLR/WALL(FULL)	1.00
EXT COVER	1	WOOD SHINGLE	1.02
ROOF SHAPE	3	GAMBREL	1.00
ROOF COVER	1	ASPH/COMP SHIN	1.00
FLOOR COVER	1	HARDWOOD	1.02
INT. FINISH	2	DRYWALL	1.00
HEATING/COOLING	2	HOT WATER	1.02
FUEL SOURCE	2	GAS	1.00
USE	0		1.00

S	BAT	T	DESCRIPTION	UNITS	YB	ADJ PRICE	RCN
+	BAS	L	BASE AREA	1,258	1968	209.22	263,203
A	USF	L	UPPER STORY FIN	98	2018	115.72	11,340
+	OPA	N	OPEN PORCH	190		72.74	13,821
C	BIG	N	BUILT-IN GARAGE	528		87.27	46,076
C	USU	N	UPPER STORY UNF	528		52.13	27,525
D	BMU	N	BSMT UNFINISHED	1,160		40.59	47,079
D	USF	L	UPPER STORY FIN	1,160	1968	115.72	134,231
E	PTA	N	PATIO	266		15.13	4,026
	F21	O	FPL 2S 1OP	1		9,804.40	9,804
	FIX	O	XTRA FIXTURES	7		2,370.21	16,592

TOTAL RCN	573,697

CONDITION ELEM	CD
EXTERIOR	G
INTERIOR	G
KITCHEN	G
BATHS	G
HEAT	A
ELECT	A

EFF.YR/AGE	2004 / 18		
COND	15	15 %	
FUNC	0		
ECON	0		
DEPR	15	% GD	85
RCNLD			$487,600