Key: 10255

Town of Bourne - Fiscal Year 2024

12/18/2023 6:02 pm SEQ #: 10,491

LEGAL

CURRENT OWNER	PARCEL ID	LOCATION
SMITH CURTIS R TR CURTIS R SMITH TRUST 9 WINGATE RD WELLESLEY HILLS, MA 02481	47.1-112-0	84 ELGIN RD

TRANSFER HISTORY	DOS	T	SALE PRICE	BK-PG (Cert)
SMITH CURTIS R TR	11/28/2014	F	1	28535-294
SMITH CURTIS R &	04/13/2006	QS	1,225,000	20910-301
KISCH GLENNE E &	04/02/2002	QS	816,000	15007-340

CLASS	CLASS%	DESCRIPTION	BN ID	BN	CARD
1010	100	SINGLE FAMILY		1	1 of 1

PMT NO	PMT DT	TY	DESC	AMOUNT	INSP	BY	1st	%
B-22-183	07/27/2022	8	POOL	167,060	02/27/2023	SL	100	100
18886	10/15/2018	15	INSULATE/WEA	5,913	08/08/2019	TL	100	100
14919	10/29/2014	3	ALT/RENO				100	100
07014	01/09/2007	3	ALT/RENO	14,000	08/23/2007	DB	100	100
890517	08/18/1989	1	NEW CONSTRUC	244,000	10/23/1991	HS	100	100

LAND

CD	T	AC/SF/UN	Nbhd	Infl1	N_Index	ADJ BASE	SAF	Topo	Lpi	VC	CREDIT AMT	ADJ VALUE
100	S	21,000	14 1.00	100 1.00	100 1.00	942,800	1.64	A 1.00	BGD 4.00			746,320

TOTAL	20,996 SF	ZONING	1	FRNT	0

Nbhd	CATAUMET
Infl1	AVG
N_Index	AVG

NOTE

ASSESSED	CURRENT	PREVIOUS
LAND	746,300	462,400
BUILDING	579,000	512,400
DETACHED	33,100	0
OTHER	0	0
TOTAL	**1,358,400**	**974,800**

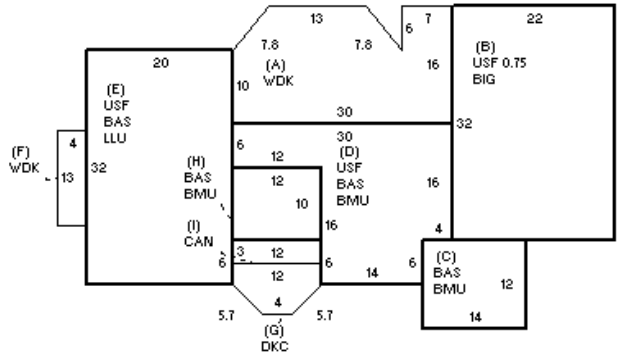

DETACHED

TY	QUAL	COND	DIM/NOTE	YB	UNITS	ADJ PRICE	RCNLD
IPG	E 1.90	10 0.90	16 X 32	2022	512	56.46	26,000
PTD	E 1.90	10 0.90	34 X 44-POOL	2022	984	6.70	5,900
PTD	E 1.90	10 0.90	12 X 12	2022	144	8.93	1,200

PHOTO 06/12/2019

BLDG COMMENTS

BUILDING

BUILDING	CD	ADJ	DESC
MODEL	1		RESIDENTIAL
STYLE	8	1.10	CONTEMPORARY [100%]
QUALITY	+	1.05	AVERAGE + [100%]
FRAME	1	1.00	WOOD FRAME [100%]

MEASURE	2/27/2023	SL
LIST	8/8/2019	TL
REVIEW	3/3/2023	RP

YEAR BLT	1989	SIZE ADJ	1.000
NET AREA	2,984	DETAIL ADJ	1.000
$NLA(RCN)	$246	OVERALL	1.170

CAPACITY	UNITS	ADJ
STORIES	2	1.00
ROOMS	6	1.00
BEDROOMS	4	1.00
BATHROOMS	3	1.00
FIXTURES	16	1.00
GARAGE CAPACITY	3	1.00
% BSMT FINISH	0	1.00
# OF HALF BATHS	1	1.00
# OF UNITS	1	1.00

ELEMENT	CD	DESCRIPTION	ADJ
FOUNDATION	4	FLR/WALL(FULL)	1.00
EXT COVER	1	WOOD SHINGLE	1.02
ROOF SHAPE	1	GABLE	1.00
ROOF COVER	1	ASPH/COMP SHIN	1.00
FLOOR COVER	1	HARDWOOD	1.02
INT. FINISH	1	PLASTER	1.00
HEATING/COOLING	9	WARM-COOL AIR	1.03
FUEL SOURCE	2	GAS	1.00
USE	0		1.00

S	BAT	T	DESCRIPTION	UNITS	YB	ADJ PRICE	RCN
+	WDK	N	WOOD DECK	502		26.24	13,173
B	BIG	N	BUILT-IN GARAGE	704		90.60	63,783
+	USF	L	UPPER STORY FIN	1,612	1989	127.72	205,892
+	BMU	N	BSMT UNFINISHED	732		56.55	41,394
+	BAS	L	BASE AREA	1,372	1989	230.94	316,844
E	LLU	N	LOWER LEVEL UNF	640		44.54	28,507
G	DKC	N	DECK-COMPOSITE	104		77.14	8,022
I	CAN	N	CANOPY	36		16.76	603
	F21	O	FPL 2S 1OP	1		10,821.90	10,822
	FIX	O	XTRA FIXTURES	11		2,616.25	28,779
	JAC	O	JACUZZI	1		15,086.00	15,086

TOTAL RCN	732,905

CONDITION ELEM	CD
EXTERIOR	A
INTERIOR	A
KITCHEN	A
BATHS	A
HEAT	A
ELECT	A

EFF.YR/AGE	1998 / 24		
COND	21	21 %	
FUNC	0		
ECON	0		
DEPR	21	% GD	79
RCNLD			$579,000