Key: 10277

Town of Bourne - Fiscal Year 2024

12/18/2023 6:02 pm SEQ #: 10,513

LEGAL

CURRENT OWNER	PARCEL ID	LOCATION
MOHAN THOMAS A JR ETUX DONNA B MOHAN 480 MONT VERNON RD NEW BOSTON, NH 03070	47.2-7-0	29 SPRUCE DR

TRANSFER HISTORY	DOS	T	SALE PRICE	BK-PG (Cert)
MOHAN THOMAS A JR ETUX	05/06/2016	QS	359,000	29632-249
CURLEY GERALD F TR	01/06/2015	F	10	28613-219
CURLEY GERALD F &	04/05/1982	F	1	3460-161

CLASS	CLASS%	DESCRIPTION	BN ID	BN	CARD
1010	100	SINGLE FAMILY		1	1 of 1

PMT NO	PMT DT	TY	DESC	AMOUNT	INSP	BY	1st	%
EXB-22-487	08/03/2022	14	SOLAR	8,136			100	100
EXB-22-131	03/11/2022	6	FENCE	8,700			100	100
B-20-242	08/27/2020	2	ADDITIONS	200,000	05/27/2021		100	100
960368	08/08/1996	4	DETACH.STRUC	700	09/24/1997	JC	100	100
910046	02/20/1991	3	ALT/RENO	15,000	02/01/1992	HS	100	100

LAND

CD	T	AC/SF/UN	Nbhd	Infl1	N_Index	ADJ BASE	SAF	Topo	Lpi	VC	CREDIT AMT	ADJ VALUE
100	S	7,200	11 1.00	100 1.00	100 1.00	518,540	4.23	A 1.00	BA- 2.20			362,830

TOTAL	7,187 SF	ZONING	1	FRNT	0
Nbhd	POC	NOTE			
Infl1	AVG				
N_Index	AVG				

ASSESSED	CURRENT	PREVIOUS
LAND	362,800	321,100
BUILDING	337,700	298,900
DETACHED	0	0
OTHER	0	0
TOTAL	**700,500**	**620,000**

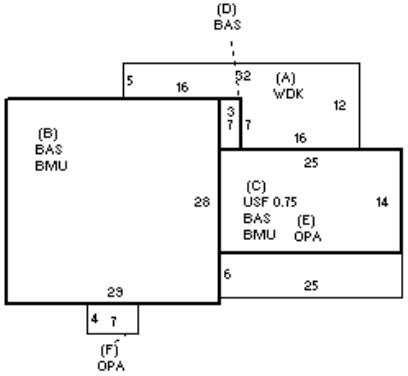

DETACHED

TY	QUAL	COND	DIM/NOTE	YB	UNITS	ADJ PRICE	RCNLD
SHF	A 1.00	10 0.90	8 X 9			0.00	

PHOTO 07/02/2021

BLDG COMMENTS

BUILDING

BUILDING	CD	ADJ	DESC
MODEL	1		RESIDENTIAL
STYLE	1	0.95	RANCH [100%]
QUALITY	+	1.05	AVERAGE + [100%]
FRAME	1	1.00	WOOD FRAME [100%]

MEASURE	6/28/2021	TL
LIST	6/28/2021	EST
REVIEW	6/28/2021	TL

YEAR BLT	1940	SIZE ADJ	1.015
NET AREA	1,446	DETAIL ADJ	1.000
$NLA(RCN)	$241	OVERALL	1.010

CAPACITY	UNITS	ADJ
STORIES	1	1.00
ROOMS	5	1.00
BEDROOMS	2	1.00
BATHROOMS	2	1.00
FIXTURES	8	1.00
GARAGE CAPACITY	0	1.00
% BSMT FINISH	0	1.00
# OF HALF BATHS	0	1.00
# OF UNITS	1	1.00

ELEMENT	CD	DESCRIPTION	ADJ
FOUNDATION	4	FLR/WALL(FULL)	1.00
EXT COVER	1	WOOD SHINGLE	1.02
ROOF SHAPE	1	GABLE	1.00
ROOF COVER	1	ASPH/COMP SHIN	1.00
FLOOR COVER	1	HARDWOOD	1.02
INT. FINISH	2	DRYWALL	1.00
HEATING/COOLING	2	HOT WATER	1.02
FUEL SOURCE	1	OIL	1.00
USE	0		1.00

S	BAT	T	DESCRIPTION	UNITS	YB	ADJ PRICE	RCN
A	WDK	N	WOOD DECK	272		27.88	7,583
+	BMU	N	BSMT UNFINISHED	1,162		39.25	45,610
+	BAS	L	BASE AREA	1,162	1940	206.63	240,108
C	USF	L	UPPER STORY FIN	263	2020	118.44	31,150
D	BAS	L	BASE AREA	21	2020	206.62	4,339
+	OPA	N	OPEN PORCH	178		70.35	12,523
	FIX	O	XTRA FIXTURES	3		2,292.40	6,877

TOTAL RCN	348,190
CONDITION ELEM	CD
EXTERIOR	G
INTERIOR	G
KITCHEN	G
BATHS	G
HEAT	U
ELECT	U

EFF.YR/AGE	2016 / 6	
COND	3 3 %	
FUNC	0	
ECON	0	
DEPR	3	% GD 97
RCNLD	$337,700	