Key: 10406

Town of Bourne - Fiscal Year 2024

12/18/2023 6:02 pm SEQ #: 10,639

LEGAL

CURRENT OWNER	PARCEL ID	LOCATION
FORMAN DIANNE M & CHARLES P TRS HARBORSIDE CATAUMET NOM TR 58 BAY PATH LANE NORWELL, MA 02061	47.4-21-2	10 HARBORSIDE LN

TRANSFER HISTORY	DOS	T	SALE PRICE	BK-PG (Cert)
FORMAN DIANNE M & CHARLES	09/21/2016	F	1	29949-176/8
VERROCHI JOSEPH & EMILY E	05/03/2016	F	1	29624-177
VERROCHI JOSEPH & EMILY E	05/03/2016	A	1,250,000	29624-147

CLASS	CLASS%	DESCRIPTION	BN ID	BN	CARD
1010	100	SINGLE FAMILY		1	1 of 1

PMT NO	PMT DT	TY	DESC	AMOUNT	INSP	BY	1st	%
EXB-21-120	02/26/2021	3	ALT/RENO	13,500			100	100
		12	CYCLICAL		04/12/2018	DB	100	100
07622	10/11/2007	9	DECK	15,000	09/25/2008	TL	100	100

LAND

CD	T	AC/SF/UN	Nbhd		Infl1		N_Index		ADJ BASE	SAF	Topo		Lpi		VC	CREDIT AMT	ADJ VALUE
100	S	40,000	14	1.00	DCK	1.00	100	1.00	1,715,896	1.00	20	0.80	BSP	9.10			1,575,350
300	A	0.142	14	1.00	100	1.00	100	1.00	148,330	1.00	A	1.00	BSP	9.10			21,060

TOTAL	1.060 Acres	ZONING	1	FRNT	0
Nbhd	CATAUMET	NOTE	Chapter 91 License #79-6 Expires 2095		
Infl1	DOCK				
N_Index	AVG				

ASSESSED	CURRENT	PREVIOUS
LAND	1,596,400	1,761,400
BUILDING	629,900	564,700
DETACHED	215,700	205,400
OTHER	0	0
TOTAL	**2,442,000**	**2,531,500**

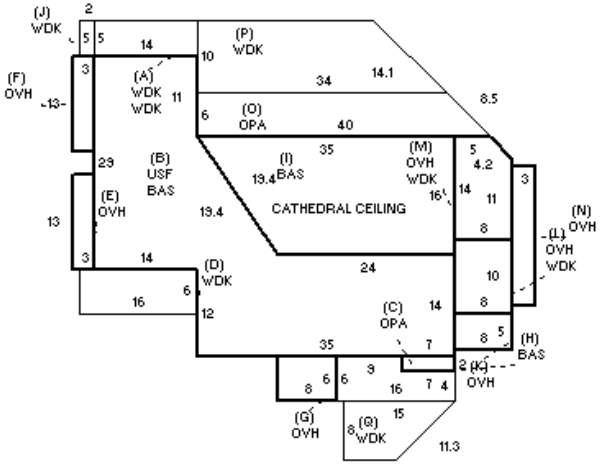

DETACHED

TY	QUAL		COND		DIM/NOTE	YB	UNITS	ADJ PRICE	RCNLD
SHF	A	1.00	10	0.90			396	14.76	5,300
PPD	E	1.90	10	0.90			565	344.28	175,100
PTD	G	1.20	10	0.90			1,682	4.23	6,400
FLD	E	1.90	10	0.90	8X35		280	114.76	28,900

PHOTO 12/31/2002

BLDG COMMENTS

BUILDING

BUILDING	CD	ADJ	DESC
MODEL	1		RESIDENTIAL
STYLE	8	1.10	CONTEMPORARY [100%]
QUALITY	V	1.35	VERY GOOD [100%]
FRAME	1	1.00	WOOD FRAME [100%]

MEASURE	4/12/2018	BC
LIST	4/12/2018	EST
REVIEW	5/23/2018	KT

YEAR BLT	1981	SIZE ADJ	1.000
NET AREA	2,865	DETAIL ADJ	1.000
$NLA(RCN)	$286	OVERALL	1.170

CAPACITY	UNITS	ADJ
STORIES	2	1.00
ROOMS	8	1.00
BEDROOMS	4	1.00
BATHROOMS	3	1.00
FIXTURES	14	1.00
GARAGE CAPACITY	0	1.00
% BSMT FINISH	0	1.00
# OF HALF BATHS	1	1.00
# OF UNITS	1	1.00

ELEMENT	CD	DESCRIPTION	ADJ
FOUNDATION	1	PIER	1.00
EXT COVER	10	VERT BOARD	1.00
ROOF SHAPE	1	GABLE	1.00
ROOF COVER	1	ASPH/COMP SHIN	1.00
FLOOR COVER	1	HARDWOOD	1.02
INT. FINISH	2	DRYWALL	1.00
HEATING/COOLING	11	HT WATER CL AIR	1.05
FUEL SOURCE	2	GAS	1.00
USE	0		1.00

S	BAT	T	DESCRIPTION	UNITS	YB	ADJ PRICE	RCN
+	WDK	N	WOOD DECK	812		33.74	27,395
+	BAS	L	BASE AREA	1,470	1981	289.77	425,956
B	USF	L	UPPER STORY FIN	984	1981	170.03	167,313
+	OPA	N	OPEN PORCH	304		92.96	28,259
+	OVH	L	OVERHANG	411	1981	286.05	117,565
	F12	O	FPL 1S 2OP	1		13,299.40	13,299
	FIX	O	XTRA FIXTURES	9		3,363.63	30,273
	KIT	O	EXTRA KITCHEN	1		7,933.80	7,934

TOTAL RCN	817,995

CONDITION ELEM	CD
EXTERIOR	A
INTERIOR	A
KITCHEN	A
BATHS	A
HEAT	A
ELECT	A

EFF.YR/AGE	1996 / 26		
COND	23	23 %	
FUNC	0		
ECON	0		
DEPR	23	% GD	77
RCNLD	$629,900		