Key: 1066

Town of Bourne - Fiscal Year 2024

12/18/2023 6:02 pm SEQ #: 1.074

LEGAL

CURRENT OWNER	PARCEL ID	LOCATION
HOGAN STEPHEN G & NANCY J 9 FIELDWOOD DRIVE SAGAMORE BEACH, MA 02562	6.0-146-0	9 FIELDWOOD DR

TRANSFER HISTORY	DOS	T	SALE PRICE	BK-PG (Cert)
HOGAN STEPHEN G & NANCY J	08/01/2019	QS	560,000	(220124)
CURRIE EDWARD D	06/18/2012	O	365,000	(197404)
TITUS DAVID B TR	01/07/2000	QS	239,900	(156230)

CLASS	CLASS%	DESCRIPTION	BN ID	BN	CARD
1010	100	SINGLE FAMILY		1	1 of 1

PMT NO	PMT DT	TY	DESC	AMOUNT	INSP	BY	1st	%
		3	ALT/RENO		06/02/2020	TL	100	100
		3	ALT/RENO		06/02/2020	TL	100	100
191117	12/02/2019	3	ALT/RENO	14,146	04/16/2021	TL	100	100
13207	04/05/2013	2	ADDITIONS	30,000	07/31/2013	JB	100	100
13165	03/19/2013	3	ALT/RENO	10,000	07/31/2013	JB	100	100

LAND

CD	T	AC/SF/UN	Nbhd	Infl1	N_Index	ADJ BASE	SAF	Topo	Lpi	VC	CREDIT AMT	ADJ VALUE
100	S	30,275	1 1.00	100 1.00	100 1.00	259,270	1.23	A 1.00	R04 1.10			221,250

TOTAL	30,274 SF	ZONING	1	FRNT	130
Nbhd	N SAG	NOTE			
Infl1	AVG				
N_Index	AVG				

ASSESSED	CURRENT	PREVIOUS
LAND	221,300	195,800
BUILDING	537,700	481,300
DETACHED	23,200	22,100
OTHER	0	0
TOTAL	**782,200**	**699,200**

DETACHED

TY	QUAL	COND	DIM/NOTE	YB	UNITS	ADJ PRICE	RCNLD
IPG	V 1.30	10 0.90	18 X 36	2013	648	33.92	19,800
SHF	G 1.20	10 0.90	10 X 20		200	19.14	3,400

PHOTO 06/02/2020

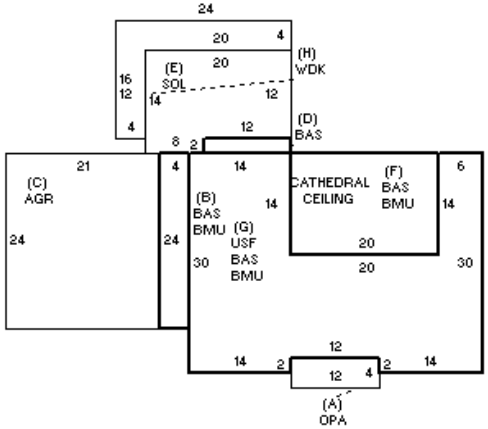

BUILDING

BUILDING	CD	ADJ	DESC
MODEL	1		RESIDENTIAL
STYLE	5	1.00	COLONIAL [100%]
QUALITY	G	1.10	GOOD [100%]
FRAME	1	1.00	WOOD FRAME [100%]

MEASURE	7/14/2021	NMP
LIST	8/7/2020	EST
REVIEW	8/7/2020	RP

BLDG COMMENTS

YEAR BLT	1999	SIZE ADJ	1.005
NET AREA	2,192	DETAIL ADJ	1.000
$NLA(RCN)	$285	OVERALL	1.080

CAPACITY	UNITS	ADJ
STORIES	2	1.00
ROOMS	7	1.00
BEDROOMS	3	1.00
BATHROOMS	3	1.00
FIXTURES	15	1.00
GARAGE CAPACITY	2	1.00
% BSMT FINISH	0	1.00
# OF HALF BATHS	1	1.00
# OF UNITS	1	1.00

ELEMENT	CD	DESCRIPTION	ADJ
FOUNDATION	4	FLR/WALL(FULL)	1.00
EXT COVER	1	WOOD SHINGLE	1.02
ROOF SHAPE	2	HIP	1.02
ROOF COVER	1	ASPH/COMP SHIN	1.00
FLOOR COVER	1	HARDWOOD	1.02
INT. FINISH	2	DRYWALL	1.00
HEATING/COOLING	2	HOT WATER	1.02
FUEL SOURCE	2	GAS	1.00
USE	0		1.00

S	BAT	T	DESCRIPTION	UNITS	YB	ADJ PRICE	RCN
A	OPA	N	OPEN PORCH	48		97.28	4,670
+	BMU	N	BSMT UNFINISHED	1,272		38.14	48,517
C	AGR	N	ATT GARAGE	504		73.79	37,191
+	BAS	L	BASE AREA	1,296	1999	224.44	290,872
E	SOL	N	SOLARIUM	256		102.96	26,359
G	USF	L	UPPER STORY FIN	896	1999	128.53	115,162
H	WDK	N	WOOD DECK	144		47.18	6,794
	BGF	N	BSMT GOOD FINIS	1,120		53.28	59,674
	F21	O	FPL 2S 1OP	1		10,517.40	10,517
	FIX	O	XTRA FIXTURES	10		2,542.61	25,426

TOTAL RCN	625,181

CONDITION ELEM	CD
EXTERIOR	A
INTERIOR	A
KITCHEN	A
BATHS	A
HEAT	U
ELECT	A

EFF.YR/AGE	2005 / 17	
COND	14	14 %
FUNC	0	
ECON	0	
DEPR	14	% GD 86
RCNLD		$537,700