Key: 10994

Town of Bourne - Fiscal Year 2024

12/18/2023 6:02 pm SEQ #: 11,283

LEGAL

CURRENT OWNER	PARCEL ID	LOCATION
RYAN STEPHEN J & C/O RYAN STEPHEN J & PO BOX 451 CATAUMET, MA 02534	51.4-33-0	9 OAK AVE

TRANSFER HISTORY	DOS	T	SALE PRICE	BK-PG (Cert)
RYAN STEPHEN J &	03/08/2023	F	1	(73340)
RYAN STEPHEN J &	03/08/2023	F	1	(73340)
RYAN STEPHEN J &		XX		(73340)

CLASS	CLASS%	DESCRIPTION	BN ID	BN	CARD
1010	100	SINGLE FAMILY		1	1 of 1

PMT NO	PMT DT	TY	DESC	AMOUNT	INSP	BY	1st	%
EXB-23-490	07/31/2023	15	INSULATE/WEA	4,671			100	100
12157	03/14/2012	2	ADDITIONS	100,000	08/29/2013	TL	100	100
12124	02/28/2012	5	DEMOLITIONS	2,000	08/29/2013	TL	100	100
09027	01/23/2009	3	ALT/RENO	3,770	04/06/2009		100	100
05516	08/03/2005	2	ADDITIONS	28,000	04/18/2006	TL	100	100

* -- Previous value excludes abatement.

LAND

CD	T	AC/SF/UN	Nbhd	Infl1	N_Index	ADJ BASE	SAF	Topo	Lpi	VC	CREDIT AMT	ADJ VALUE
100	S	38,560	14 1.00	100 1.00	100 1.00	424,260	1.03	A 1.00	R09 1.80			385,440

TOTAL	38,551 SF	ZONING	1	FRNT	0
Nbhd	CATAUMET	NOTE	ALSO OWNS CONTIGUOUS PCL 32 WHICH IS UNBUILDABLE		
Infl1	AVG				
N_Index	AVG				

ASSESSED	CURRENT	PREVIOUS
LAND	385,400	341,100
BUILDING	307,800	293,600
DETACHED	0	0
OTHER	0	0
TOTAL	**693,200**	**634,700**

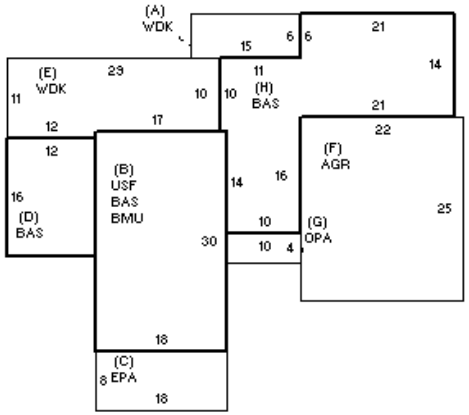

DETACHED

TY	QUAL	COND	DIM/NOTE	YB	UNITS	ADJ PRICE	RCNLD
CBN	M 0.70	80 0.20	16 X 20			0.00	
SHF	A 1.00	50 0.50	6 X 6			0.00	

PHOTO 08/29/2013

BLDG COMMENTS

BUILDING

BUILDING	CD	ADJ	DESC
MODEL	1		RESIDENTIAL
STYLE	7	1.00	CONVENTIONAL [100%]
QUALITY	A	1.00	AVERAGE [100%]
FRAME	1	1.00	WOOD FRAME [100%]

MEASURE	2/6/2023	RP
LIST	2/6/2023	RP
REVIEW	2/6/2023	RP

YEAR BLT	1875	SIZE ADJ	1.010
NET AREA	1,816	DETAIL ADJ	1.000
$NLA(RCN)	$220	OVERALL	1.020

CAPACITY	UNITS	ADJ
STORIES	2	1.00
ROOMS	5	1.00
BEDROOMS	3	1.00
BATHROOMS	2	1.00
FIXTURES	8	1.00
GARAGE CAPACITY	0	1.00
% BSMT FINISH	0	1.00
# OF HALF BATHS	0	1.00
# OF UNITS	1	1.00

ELEMENT	CD	DESCRIPTION	ADJ
FOUNDATION	4	FLR/WALL(FULL)	1.00
EXT COVER	3	ALUMINUM	1.00
ROOF SHAPE	2	HIP	1.02
ROOF COVER	1	ASPH/COMP SHIN	1.00
FLOOR COVER	35	W/W-VINYL	1.00
INT. FINISH	2	DRYWALL	1.00
HEATING/COOLING	1	FORCED AIR	1.00
FUEL SOURCE	2	GAS	1.00
USE	0		1.00

S	BAT	T	DESCRIPTION	UNITS	YB	ADJ PRICE	RCN
+	WDK	N	WOOD DECK	392		22.00	8,626
B	BMU	N	BSMT UNFINISHED	540		47.42	25,608
B	BAS	L	BASE AREA	540	1875	193.66	104,576
B	USF	L	UPPER STORY FIN	540	1875	113.36	61,212
C	EPA	N	ENCLOSED PORCH	144		84.76	12,205
D	BAS	L	BASE AREA	192	2005	193.66	37,183
F	AGR	N	ATT GARAGE	550		63.67	35,020
G	OPA	N	OPEN PORCH	40		83.94	3,357
H	BAS	L	BASE AREA	544	2012	193.66	105,350
	FIX	O	XTRA FIXTURES	3		2,193.97	6,582

TOTAL RCN	399,719

CONDITION ELEM	CD
EXTERIOR	A
INTERIOR	F
KITCHEN	F
BATHS	F
HEAT	A
ELECT	A

EFF.YR/AGE	1996 / 26		
COND	23	23 %	
FUNC	0		
ECON	0		
DEPR	23	% GD	77
RCNLD			$307,800