Key: 11029

Town of Bourne - Fiscal Year 2024

12/18/2023 6:02 pm SEQ #: 11,320

LEGAL

CURRENT OWNER	PARCEL ID	LOCATION
KOBERSTEIN JEFFREY T ETUX LINDA L FARMER P O BOX 8 CATAUMET, MA 02534	51.4-69-0	3 OLOFSON DR

TRANSFER HISTORY	DOS	T	SALE PRICE	BK-PG (Cert)
KOBERSTEIN JEFFREY T ETUX	12/28/2010	QS	450,000	25131-79
FIERRA DAVID A &	04/13/2000	P	72,500	12944-74
ARNONE WILLIAM H		XX		05438-00280

CLASS	CLASS%	DESCRIPTION	BN ID	BN	CARD
1010	100	SINGLE FAMILY		1	1 of 1

PMT NO	PMT DT	TY	DESC	AMOUNT	INSP	BY	1st	%
		3	ALT/RENO		09/03/2020		100	100
EXB-20-181	08/11/2020	10	WOODSTOVE	2,000			100	100
18261-B	03/26/2019	4	DETACH.STRUC	16,000			100	100
18261	04/05/2018	4	DETACH.STRUC	16,000	04/17/2018	TL	100	100
16642	07/28/2016	9	DECK	45,000	04/17/2018	TL	100	100

LAND

CD	T	AC/SF/UN	Nbhd	Infl1	N_Index	ADJ BASE	SAF	Topo	Lpi	VC	CREDIT AMT	ADJ VALUE
100	S	32,250	14 1.00	100 1.00	100 1.00	294,625	1.17	A 1.00	R06 1.25			255,300

TOTAL	32,234 SF	ZONING	1	FRNT	0

Nbhd	CATAUMET
Infl1	AVG
N_Index	AVG

NOTE

ASSESSED	CURRENT	PREVIOUS
LAND	255,300	225,900
BUILDING	554,300	496,100
DETACHED	19,200	18,300
OTHER	0	0
TOTAL	**828,800**	**740,300**

DETACHED

TY	QUAL	COND	DIM/NOTE	YB	UNITS	ADJ PRICE	RCNLD
IPG	A 1.00	10 0.90	12 X 24	2012	288	42.92	11,100
SHF	A 1.00	10 0.90	5 X 6	2018		0.00	
SHF	E 1.90	10 0.90	16 X 20	2019	320	28.04	8,100

PHOTO 04/17/2018

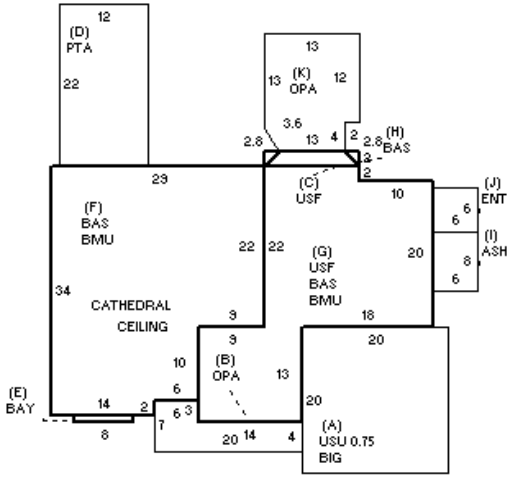

BUILDING

BUILDING	CD	ADJ	DESC
MODEL	1		RESIDENTIAL
STYLE	8	1.10	CONTEMPORARY [100%]
QUALITY	+	1.05	AVERAGE + [100%]
FRAME	1	1.00	WOOD FRAME [100%]

MEASURE	4/17/2018	TL
LIST	4/17/2018	TL
REVIEW	9/3/2020	TL

BLDG COMMENTS

YEAR BLT	2001	SIZE ADJ	1.005
NET AREA	2,258	DETAIL ADJ	1.000
$NLA(RCN)	$279	OVERALL	1.140

CAPACITY	UNITS	ADJ
STORIES	2	1.00
ROOMS	5	1.00
BEDROOMS	2	1.00
BATHROOMS	2	1.00
FIXTURES	12	1.00
GARAGE CAPACITY	1	1.00
% BSMT FINISH	0	1.00
# OF HALF BATHS	1	1.00
# OF UNITS	1	1.00

ELEMENT	CD	DESCRIPTION	ADJ
FOUNDATION	4	FLR/WALL(FULL)	1.00
EXT COVER	1	WOOD SHINGLE	1.02
ROOF SHAPE	1	GABLE	1.00
ROOF COVER	1	ASPH/COMP SHIN	1.00
FLOOR COVER	1	HARDWOOD	1.02
INT. FINISH	2	DRYWALL	1.00
HEATING/COOLING	1	FORCED AIR	1.00
FUEL SOURCE	2	GAS	1.00
USE	0		1.00

S	BAT	T	DESCRIPTION	UNITS	YB	ADJ PRICE	RCN
A	BIG	N	BUILT-IN GARAGE	400		106.52	42,606
A	USU	N	UPPER STORY UNF	300		56.34	16,903
+	OPA	N	OPEN PORCH	295		70.80	20,885
+	USF	L	UPPER STORY FIN	694	2001	130.80	90,779
D	PTA	N	PATIO	264		16.36	4,319
E	BAY	L	BAYWINDOW	8	2001	217.89	1,743
+	BMU	N	BSMT UNFINISHED	1,534		38.43	58,954
+	BAS	L	BASE AREA	1,556	2001	220.69	343,398
I	ASH	N	ATT SHED	48		29.90	1,435
J	ENT	N	ENCLOSED ENTRY	36		101.69	3,661
	FIX	O	XTRA FIXTURES	7		2,561.84	17,933
	GFP	O	GAS FIREPLACE	1		7,699.10	7,699
	JAC	O	JACUZZI	1		14,772.70	14,773
	MST	O	MAS/METAL STACK	1		4,801.10	4,801

TOTAL RCN	629,888

CONDITION ELEM	CD
EXTERIOR	A
INTERIOR	A
KITCHEN	G
BATHS	G
HEAT	A
ELECT	A

EFF.YR/AGE	2007 / 15	
COND	12	12 %
FUNC	0	
ECON	0	
DEPR	12	% GD 88
RCNLD		$554,300