Key: 11058

Town of Bourne - Fiscal Year 2024

12/18/2023 6:02 pm SEQ #: 11,348

LEGAL

CURRENT OWNER	PARCEL ID	LOCATION
MYERSON ANN 175 RAWSON RD BROOKLINE, MA 02445	51.4-97-0	5 BOBWHITE LN

TRANSFER HISTORY	DOS	T	SALE PRICE	BK-PG (Cert)
MYERSON ANN	07/01/2015	A	200,000	(206712)
MYERSON JOSEPH ETUX	01/31/2012	F	10	(196247)
MYERSON JOSEPH ETALS	07/10/2001	QS	329,000	(162121)

CLASS	CLASS%	DESCRIPTION	BN ID	BN	CARD
1010	100	SINGLE FAMILY		1	1 of 1

PMT NO	PMT DT	TY	DESC	AMOUNT	INSP	BY	1st	%
16014	01/11/2016	3	ALT/RENO	6,000	11/17/2016		100	100
15975	10/27/2015	3	ALT/RENO	6,500	11/17/2016		100	100
13232	04/17/2013	3	ALT/RENO	11,770	01/12/2015	TL	100	100
970647	12/26/1997	1	NEW CONSTRUC	82,000	01/05/1998	JC	100	100
970273	06/04/1997	1	NEW CONSTRUC	83,000	01/05/1998	JC	100	100

LAND

CD	T	AC/SF/UN	Nbhd	Infl1	N_Index	ADJ BASE	SAF	Topo	Lpi	VC	CREDIT AMT	ADJ VALUE
100	S	24,033	14 1.00	100 1.00	100 1.00	294,625	1.47	A 1.00	R06 1.25			239,180

TOTAL	24,045 SF	ZONING	1	FRNT	0
Nbhd	CATAUMET	NOTE			
Infl1	AVG				
N_Index	AVG				

ASSESSED	CURRENT	PREVIOUS
LAND	239,200	211,700
BUILDING	342,400	306,700
DETACHED	0	0
OTHER	0	0
TOTAL	**581,600**	**518,400**

DETACHED

TY	QUAL	COND	DIM/NOTE	YB	UNITS	ADJ PRICE	RCNLD

PHOTO 01/22/2015

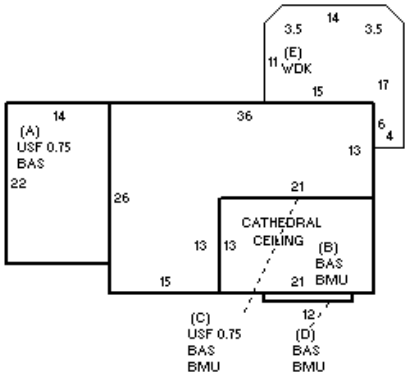

BLDG COMMENTS

BUILDING

BUILDING	CD	ADJ	DESC
MODEL	1		RESIDENTIAL
STYLE	4	1.05	CAPE [100%]
QUALITY	A	1.00	AVERAGE [100%]
FRAME	1	1.00	WOOD FRAME [100%]

MEASURE	1/12/2015	TL
LIST	1/12/2015	TL
REVIEW	3/31/2015	DB

YEAR BLT	1997	SIZE ADJ	1.010
NET AREA	1,984	DETAIL ADJ	1.000
$NLA(RCN)	$213	OVERALL	1.120

CAPACITY	UNITS	ADJ
STORIES	1.75	1.00
ROOMS	7	1.00
BEDROOMS	4	1.00
BATHROOMS	2	1.00
FIXTURES	11	1.00
GARAGE CAPACITY	0	1.00
% BSMT FINISH	0	1.00
# OF HALF BATHS	1	1.00
# OF UNITS	1	1.00

ELEMENT	CD	DESCRIPTION	ADJ
FOUNDATION	4	FLR/WALL(FULL)	1.00
EXT COVER	1	WOOD SHINGLE	1.02
ROOF SHAPE	1	GABLE	1.00
ROOF COVER	1	ASPH/COMP SHIN	1.00
FLOOR COVER	13	HARDWOOD-W/W	1.00
INT. FINISH	2	DRYWALL	1.00
HEATING/COOLING	11	HT WATER CL AIR	1.05
FUEL SOURCE	2	GAS	1.00
USE	0		1.00

S	BAT	T	DESCRIPTION	UNITS	YB	ADJ PRICE	RCN
+	BAS	L	BASE AREA	1,256	1997	212.64	267,082
+	USF	L	UPPER STORY FIN	728	1997	123.00	89,544
+	BMU	N	BSMT UNFINISHED	948		41.25	39,105
E	WDK	N	WOOD DECK	274		29.30	8,027
	FIX	O	XTRA FIXTURES	6		2,409.08	14,455
	MST	O	MAS/METAL STACK	1		4,514.60	4,515

TOTAL RCN	422,726

CONDITION ELEM	CD
EXTERIOR	A
INTERIOR	A
KITCHEN	A
BATHS	A
HEAT	A
ELECT	A

EFF.YR/AGE	2000 / 22	
COND	19	19 %
FUNC	0	
ECON	0	
DEPR	19	% GD 81
RCNLD		$342,400