Key: 11064

Town of Bourne - Fiscal Year 2024

12/18/2023 6:02 pm SEQ #: 11,354

LEGAL

CURRENT OWNER	PARCEL ID	LOCATION
BURG DANIEL J PO BOX 784 CATAUMET, MA 02534	51.4-103-0	1318 COUNTY RD

TRANSFER HISTORY	DOS	T	SALE PRICE	BK-PG (Cert)
BURG DANIEL J	07/20/2012	S	220,000	26517-234
FEDERAL NATIONAL MORTGAGE	12/23/2011	L	351,299	25950-200
CURRY ROBERT W &		XX		2244-332

CLASS	CLASS%	DESCRIPTION	BN ID	BN	CARD
1010	100	SINGLE FAMILY		1	1 of 1

PMT NO	PMT DT	TY	DESC	AMOUNT	INSP	BY	1st	%

LAND

CD	T	AC/SF/UN	Nbhd	Infl1	N_Index	ADJ BASE	SAF	Topo	Lpi	VC	CREDIT AMT	ADJ VALUE
100	S	20,480	14 1.00	100 1.00	100 1.00	223,915	1.68	A 1.00	R03 0.95			176,470

TOTAL	20,473 SF	ZONING	1	FRNT	0
Nbhd	CATAUMET	NOTE			
Infl1	AVG				
N_Index	AVG				

ASSESSED	CURRENT	PREVIOUS
LAND	176,500	156,200
BUILDING	306,500	271,200
DETACHED	0	0
OTHER	0	0
TOTAL	**483,000**	**427,400**

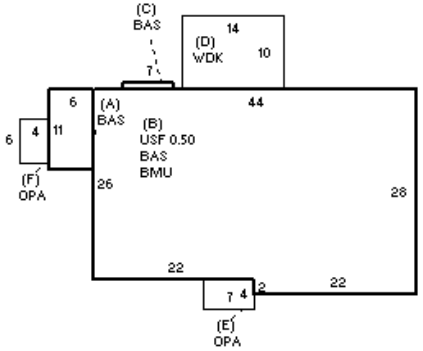

DETACHED

TY	QUAL	COND	DIM/NOTE	YB	UNITS	ADJ PRICE	RCNLD
SHF	A 1.00	30 0.70	9X11			0.00	

PHOTO 05/12/2008

BLDG COMMENTS

BUILDING

BUILDING	CD	ADJ	DESC
MODEL	1		RESIDENTIAL
STYLE	4	1.05	CAPE [100%]
QUALITY	A	1.00	AVERAGE [100%]
FRAME	1	1.00	WOOD FRAME [100%]

MEASURE	8/9/2008	SAL
LIST	8/9/2008	EST
REVIEW	8/13/2008	KEO

YEAR BLT	1978	SIZE ADJ	1.010
NET AREA	1,855	DETAIL ADJ	1.000
$NLA(RCN)	$215	OVERALL	1.070

CAPACITY	UNITS	ADJ
STORIES	1.5	1.00
ROOMS	6	1.00
BEDROOMS	3	1.00
BATHROOMS	1	1.00
FIXTURES	7	1.00
GARAGE CAPACITY	0	1.00
% BSMT FINISH	0	1.00
# OF HALF BATHS	1	1.00
# OF UNITS	1	1.00

ELEMENT	CD	DESCRIPTION	ADJ
FOUNDATION	4	FLR/WALL(FULL)	1.00
EXT COVER	1	WOOD SHINGLE	1.02
ROOF SHAPE	1	GABLE	1.00
ROOF COVER	1	ASPH/COMP SHIN	1.00
FLOOR COVER	35	W/W-VINYL	1.00
INT. FINISH	2	DRYWALL	1.00
HEATING/COOLING	1	FORCED AIR	1.00
FUEL SOURCE	2	GAS	1.00
USE	0		1.00

S	BAT	T	DESCRIPTION	UNITS	YB	ADJ PRICE	RCN
+	BAS	L	BASE AREA	1,261	1978	203.15	256,175
B	BMU	N	BSMT UNFINISHED	1,188		39.41	46,816
B	USF	L	UPPER STORY FIN	594	1978	118.91	70,634
D	WDK	N	WOOD DECK	140		42.70	5,978
+	OPA	N	OPEN PORCH	52		82.82	4,307
	F21	O	FPL 2S 1OP	1		9,519.90	9,520
	FIX	O	XTRA FIXTURES	2		2,301.35	4,603

TOTAL RCN	398,032

CONDITION ELEM	CD
EXTERIOR	A
INTERIOR	A
KITCHEN	A
BATHS	A
HEAT	A
ELECT	A

EFF.YR/AGE	1996 / 26	
COND	23	23 %
FUNC	0	
ECON	0	
DEPR	23	% GD 77
RCNLD		$306,500