Key: 11067

Town of Bourne - Fiscal Year 2024

12/18/2023 6:02 pm SEQ #: 11,357

LEGAL

CURRENT OWNER	PARCEL ID	LOCATION
BAGDONAS RYAN A & ALBERTO GOMEZ ALVAREZ PO BOX 666 CATAUMET, MA 02534	51.4-106-0	3 SHEARWATER DR

TRANSFER HISTORY	DOS	T	SALE PRICE	BK-PG (Cert)
BAGDONAS RYAN A &	06/06/2016	A	390,000	29701-245
BAGDONAS MADELINE L	02/17/2016	F	1	29455-88
BAGDONAS EDMOND F &	07/11/1990	XX		7224-53

CLASS	CLASS%	DESCRIPTION	BN ID	BN	CARD
1010	100	SINGLE FAMILY		1	1 of 1

PMT NO	PMT DT	TY	DESC	AMOUNT	INSP	BY	1st	%
EXB-23-546	08/21/2023	15	INSULATE/WEA	6,596			100	100
960451	09/18/1996	6	FENCE	1,200	08/26/1997	JC	100	100
900308	06/13/1990	9	DECK	2,500	08/28/1991	HS	100	100

LAND

CD	T	AC/SF/UN	Nbhd	Infl1	N_Index	ADJ BASE	SAF	Topo	Lpi	VC	CREDIT AMT	ADJ VALUE
100	S	20,007	14 1.00	100 1.00	100 1.00	294,625	1.71	A 1.00	R06 1.25			231,280

TOTAL	19,994 SF	ZONING	1	FRNT	0

Nbhd	CATAUMET
Infl1	AVG
N_Index	AVG

NOTE

ASSESSED	CURRENT	PREVIOUS
LAND	231,300	204,700
BUILDING	360,500	319,000
DETACHED	0	0
OTHER	0	0
TOTAL	**591,800**	**523,700**

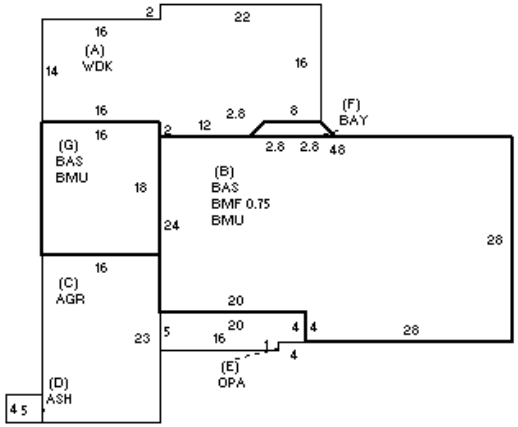

DETACHED

TY	QUAL	COND	DIM/NOTE	YB	UNITS	ADJ PRICE	RCNLD

PHOTO 09/13/2021

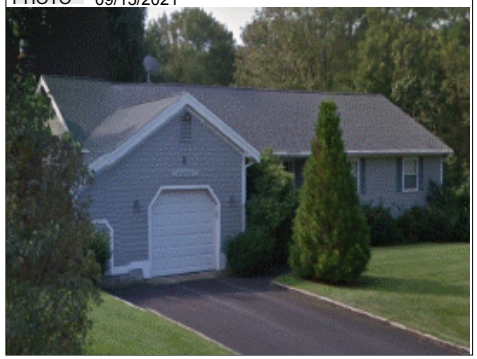

BLDG COMMENTS

BUILDING

BUILDING	CD	ADJ	DESC
MODEL	1		RESIDENTIAL
STYLE	1	0.95	RANCH [100%]
QUALITY	A	1.00	AVERAGE [100%]
FRAME	1	1.00	WOOD FRAME [100%]

MEASURE	9/13/2021	RP
LIST	9/13/2021	EST
REVIEW	9/13/2021	RP

YEAR BLT	1986	SIZE ADJ	1.010
NET AREA	1,572	DETAIL ADJ	1.000
$NLA(RCN)	$280	OVERALL	0.990

CAPACITY	UNITS	ADJ
STORIES	1	1.00
ROOMS	6	1.00
BEDROOMS	3	1.00
BATHROOMS	2	1.00
FIXTURES	12	1.00
GARAGE CAPACITY	1	1.00
% BSMT FINISH	75	1.00
# OF HALF BATHS	2	1.00
# OF UNITS	1	1.00

ELEMENT	CD	DESCRIPTION	ADJ
FOUNDATION	4	FLR/WALL(FULL)	1.00
EXT COVER	1	WOOD SHINGLE	1.02
ROOF SHAPE	1	GABLE	1.00
ROOF COVER	1	ASPH/COMP SHIN	1.00
FLOOR COVER	35	W/W-VINYL	1.00
INT. FINISH	2	DRYWALL	1.00
HEATING/COOLING	2	HOT WATER	1.02
FUEL SOURCE	2	GAS	1.00
USE	0		1.00

S	BAT	T	DESCRIPTION	UNITS	YB	ADJ PRICE	RCN
A	WDK	N	WOOD DECK	602		21.36	12,858
+	BMU	N	BSMT UNFINISHED	1,552		31.94	49,576
B	BMF	N	BSMT FINISH	948		34.71	32,901
+	BAS	L	BASE AREA	1,552	1986	183.44	284,693
C	AGR	N	ATT GARAGE	368		69.79	25,682
D	ASH	N	ATT SHED	20		24.85	497
E	OPA	N	OPEN PORCH	96		71.86	6,898
F	BAY	L	BAYWINDOW	20	1986	181.08	3,622
	F11	O	FPL 1S 1OP	1		8,017.20	8,017
	FIX	O	XTRA FIXTURES	7		2,129.36	14,906

TOTAL RCN	439,649

CONDITION ELEM	CD
EXTERIOR	A
INTERIOR	A
KITCHEN	A
BATHS	A
HEAT	U
ELECT	A

EFF.YR/AGE	2001 / 21	
COND	18	18 %
FUNC	0	
ECON	0	
DEPR	18	% GD 82
RCNLD		$360,500