Key: 11114

Town of Bourne - Fiscal Year 2024

12/18/2023 6:02 pm SEQ #: 11.406

LEGAL

CURRENT OWNER	PARCEL ID	LOCATION
FERGUSON ELLEN V & JAMES S FERGUSON JR PO BOX 674 CATAUMET, MA 02534-0674	52.0-16-0	6 SCRAGGY NECK RD EXT

TRANSFER HISTORY	DOS	T	SALE PRICE	BK-PG (Cert)
FERGUSON ELLEN V &	12/06/1996	QS	129,000	10514-48

CLASS	CLASS%	DESCRIPTION	BN ID	BN	CARD
1010	100	SINGLE FAMILY		1	1 of 1

PMT NO	PMT DT	TY	DESC	AMOUNT	INSP	BY	1st	%
H725	08/13/2020	3	ALT/RENO				100	100
H726	08/13/2020	3	ALT/RENO				100	100
19852	09/16/2019	3	ALT/RENO	4,584	10/24/2019	TL	100	100
19776	08/22/2019	3	ALT/RENO	8,825	10/24/2019	TL	100	100
15752	08/26/2015	14	SOLAR	32,500			100	100

LAND

CD	T	AC/SF/UN	Nbhd	Infl1	N_Index	ADJ BASE	SAF	Topo	Lpi	VC	CREDIT AMT	ADJ VALUE
100	S	18,937	14 1.00	100 1.00	100 1.00	235,700	1.79	A 1.00	R04 1.00			183,340

TOTAL	18,949 SF	ZONING	1	FRNT	0
Nbhd	CATAUMET	NOTE			
Infl1	AVG				
N_Index	AVG				

ASSESSED	CURRENT	PREVIOUS
LAND	183,300	162,300
BUILDING	375,400	332,100
DETACHED	2,300	2,200
OTHER	0	0
TOTAL	**561,000**	**496,600**

DETACHED

TY	QUAL	COND	DIM/NOTE	YB	UNITS	ADJ PRICE	RCNLD
SHF	G 1.20	A 0.75	10 X 16	2005	160	19.14	2,300

PHOTO 10/25/2019

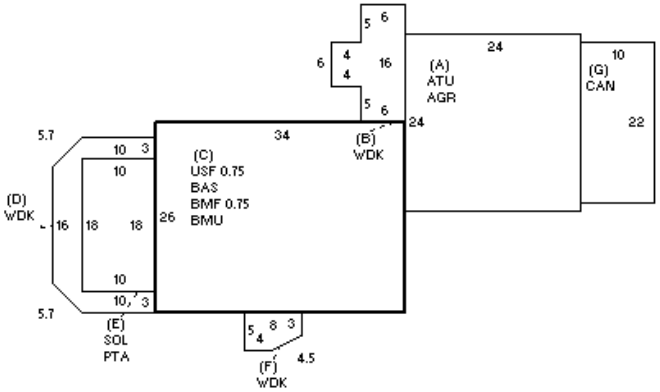

BUILDING

BUILDING	CD	ADJ	DESC
MODEL	1		RESIDENTIAL
STYLE	4	1.05	CAPE [100%]
QUALITY	A	1.00	AVERAGE [100%]
FRAME	1	1.00	WOOD FRAME [100%]

MEASURE	10/24/2019	TL
LIST	10/24/2019	TL
REVIEW		

BLDG COMMENTS

YEAR BLT	1987	SIZE ADJ	1.010
NET AREA	1,547	DETAIL ADJ	1.000
$NLA(RCN)	$296	OVERALL	1.090

CAPACITY	UNITS	ADJ
STORIES	1.75	1.00
ROOMS	5	1.00
BEDROOMS	3	1.00
BATHROOMS	2	1.00
FIXTURES	9	1.00
GARAGE CAPACITY	2	1.00
% BSMT FINISH	75	1.00
# OF HALF BATHS	0	1.00
# OF UNITS	1	1.00

ELEMENT	CD	DESCRIPTION	ADJ
FOUNDATION	4	FLR/WALL(FULL)	1.00
EXT COVER	1	WOOD SHINGLE	1.02
ROOF SHAPE	1	GABLE	1.00
ROOF COVER	1	ASPH/COMP SHIN	1.00
FLOOR COVER	35	W/W-VINYL	1.00
INT. FINISH	2	DRYWALL	1.00
HEATING/COOLING	2	HOT WATER	1.02
FUEL SOURCE	2	GAS	1.00
USE	0		1.00

S	BAT	T	DESCRIPTION	UNITS	YB	ADJ PRICE	RCN
A	AGR	N	ATT GARAGE	576		68.04	39,192
A	ATU	N	ATTIC UNF	576		46.53	26,801
+	WDK	N	WOOD DECK	296		28.51	8,440
C	BMU	N	BSMT UNFINISHED	884		40.14	35,488
C	BMF	N	BSMT FINISH	663		48.24	31,980
C	BAS	L	BASE AREA	884	1987	218.31	192,989
C	USF	L	UPPER STORY FIN	663	1987	119.70	79,364
E	PTA	N	PATIO	180		15.54	2,796
E	SOL	N	SOLARIUM	180		105.52	18,993
G	CAN	N	CANOPY	220		11.99	2,637
	F21	O	FPL 2S 1OP	1		9,697.80	9,698
	FIX	O	XTRA FIXTURES	4		2,344.38	9,378

TOTAL RCN	457,754

CONDITION ELEM	CD
EXTERIOR	A
INTERIOR	A
KITCHEN	A
BATHS	A
HEAT	U
ELECT	A

EFF.YR/AGE	2001 / 21		
COND	18	18 %	
FUNC	0		
ECON	0		
DEPR	18	% GD	82
RCNLD	$375,400		