Key: 11157

Town of Bourne - Fiscal Year 2024

12/18/2023 6:02 pm SEQ #: 11,450

LEGAL

CURRENT OWNER	PARCEL ID	LOCATION
MOSCARITOLO PAUL & MARIA S MOSCARITOLO PO BOX 650 CATAUMET, MA 02534-0650	52.0-54-0	2 SWAN CIR

TRANSFER HISTORY	DOS	T	SALE PRICE	BK-PG (Cert)
MOSCARITOLO PAUL &	06/16/1994	QS	49,000	9240-093

CLASS	CLASS%	DESCRIPTION	BN ID	BN	CARD
1010	100	SINGLE FAMILY		1	1 of 1

PMT NO	PMT DT	TY	DESC	AMOUNT	INSP	BY	1st	%
940350	07/26/1994	1	NEW CONSTRUC	58,000	02/16/1999	JS	100	100

LAND

CD	T	AC/SF/UN	Nbhd		Infl1		N_Index		ADJ BASE	SAF	Topo		Lpi		VC	CREDIT AMT	ADJ VALUE
100	S	40,000	14	1.00	100	1.00	100	1.00	235,700	1.00	A	1.00	R04	1.00			216,390
300	A	0.021	14	1.00	100	1.00	100	1.00	16,300	1.00	A	1.00	R04	1.00			340

TOTAL	40,903 SF	ZONING	1	FRNT	0
Nbhd	CATAUMET	NOTE			
Infl1	AVG				
N_Index	AVG				

ASSESSED	CURRENT	PREVIOUS
LAND	216,700	191,800
BUILDING	507,400	448,900
DETACHED	0	0
OTHER	0	0
TOTAL	**724,100**	**640,700**

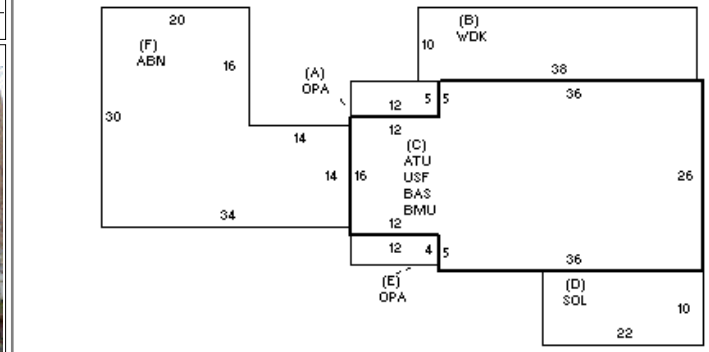

DETACHED

TY	QUAL	COND	DIM/NOTE	YB	UNITS	ADJ PRICE	RCNLD

PHOTO 11/04/2013

BLDG COMMENTS

BUILDING

BUILDING	CD	ADJ	DESC
MODEL	1		RESIDENTIAL
STYLE	5	1.00	COLONIAL [100%]
QUALITY	+	1.05	AVERAGE + [100%]
FRAME	1	1.00	WOOD FRAME [100%]

MEASURE	11/4/2013	JB
LIST	3/3/2017	EST
REVIEW	3/3/2017	TL

YEAR BLT	1994	SIZE ADJ	1.005
NET AREA	2,256	DETAIL ADJ	1.000
$NLA(RCN)	$256	OVERALL	1.060

CAPACITY	UNITS	ADJ
STORIES	2.5	1.00
ROOMS	5	1.00
BEDROOMS	2	1.00
BATHROOMS	1	1.00
FIXTURES	5	1.00
GARAGE CAPACITY	0	1.00
% BSMT FINISH	0	1.00
# OF HALF BATHS	0	1.00
# OF UNITS	1	1.00

ELEMENT	CD	DESCRIPTION	ADJ
FOUNDATION	4	FLR/WALL(FULL)	1.00
EXT COVER	1	WOOD SHINGLE	1.02
ROOF SHAPE	1	GABLE	1.00
ROOF COVER	1	ASPH/COMP SHIN	1.00
FLOOR COVER	1	HARDWOOD	1.02
INT. FINISH	2	DRYWALL	1.00
HEATING/COOLING	2	HOT WATER	1.02
FUEL SOURCE	2	GAS	1.00
USE	0		1.00

S	BAT	T	DESCRIPTION	UNITS	YB	ADJ PRICE	RCN
+	OPA	N	OPEN PORCH	108		76.75	8,289
B	WDK	N	WOOD DECK	380		23.89	9,079
C	BMU	N	BSMT UNFINISHED	1,128		40.79	46,009
C	BAS	L	BASE AREA	1,128	1994	214.73	242,212
C	USF	L	UPPER STORY FIN	1,128	1994	116.30	131,181
C	ATU	N	ATTIC UNF	1,128		44.67	50,389
D	SOL	N	SOLARIUM	220		96.47	21,223
F	ABN	N	ATT BARN	796		62.08	49,416
	FIX	O	XTRA FIXTURES	6		2,382.17	14,293
	MST	O	MAS/METAL STACK	1		4,464.20	4,464

TOTAL RCN	576,554

CONDITION ELEM	CD
EXTERIOR	G
INTERIOR	G
KITCHEN	G
BATHS	G
HEAT	A
ELECT	A

EFF.YR/AGE	2007 / 15	
COND	12	12 %
FUNC	0	
ECON	0	
DEPR	12	% GD 88
RCNLD		$507,400