Key: 1193

Town of Bourne - Fiscal Year 2024

12/18/2023 6:02 pm SEQ #: 1.201

LEGAL

CURRENT OWNER	PARCEL ID	LOCATION
CRISTADORO KATHLEEN A 197 OLD PLYMOUTH RD SAGAMORE BEACH, MA 02562-2427	7.0-11-2	197 OLD PLYMOUTH RD

TRANSFER HISTORY	DOS	T	SALE PRICE	BK-PG (Cert)
CRISTADORO KATHLEEN A CRISTADORO RICHARD L	05/26/2000	A XX		() 03527-0141

CLASS	CLASS%	DESCRIPTION	BN ID	BN	CARD
1010	100	SINGLE FAMILY		1	1 of 1

PMT NO	PMT DT	TY	DESC	AMOUNT	INSP	BY	1st	%
19843	09/13/2019	15	INSULATE/WEA	2,255			100	100
08185	05/05/2008	3	ALT/RENO	2,550	07/11/2008		100	100
07364	06/27/2007	10	WOODSTOVE		03/21/2008	TL	100	100
06284	05/15/2006	2	ADDITIONS	26,000	09/27/2007	DB	100	100
940474	09/29/1994	2	ADDITIONS	32,000	03/27/1995	JS	100	100

LAND

CD	T	AC/SF/UN	Nbhd	Infl1	N_Index	ADJ BASE	SAF	Topo	Lpi	VC	CREDIT AMT	ADJ VALUE
100	S	29,800	1 1.00	100 1.00	100 1.00	200,345	1.24	15 0.85	R03 1.00			170,320

TOTAL	29,795 SF	ZONING	1	FRNT	89

Nbhd	N SAG
Infl1	AVG
N_Index	AVG

NOTE: Also frontage on Cunningham Rd;kettle hole 149x139 depth topo

ASSESSED	CURRENT	PREVIOUS
LAND	170,300	150,700
BUILDING	392,800	347,500
DETACHED	1,000	1,400
OTHER	0	0
TOTAL	**564,100**	**499,600**

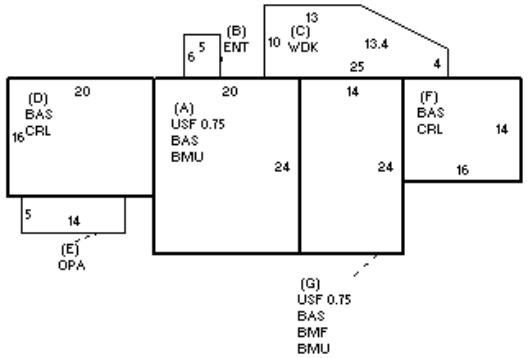

DETACHED

TY	QUAL	COND	DIM/NOTE	YB	UNITS	ADJ PRICE	RCNLD
SHF	A 1.00	50 0.50	10 X 12		120	16.42	1,000

PHOTO 07/11/2008

BLDG COMMENTS

BUILDING

BUILDING	CD	ADJ	DESC
MODEL	1		RESIDENTIAL
STYLE	4	1.05	CAPE [100%]
QUALITY	+	1.05	AVERAGE + [100%]
FRAME	1	1.00	WOOD FRAME [100%]

MEASURE	12/29/2021	NMP
LIST	7/11/2008	JH
REVIEW	8/8/2008	KEO

YEAR BLT	1978	SIZE ADJ	1.010
NET AREA	1,972	DETAIL ADJ	1.000
$NLA(RCN)	$240	OVERALL	1.090

CAPACITY	UNITS	ADJ
STORIES	1.75	1.00
ROOMS	8	1.00
BEDROOMS	3	1.00
BATHROOMS	2	1.00
FIXTURES	8	1.00
GARAGE CAPACITY	0	1.00
% BSMT FINISH	40	1.00
# OF HALF BATHS	0	1.00
# OF UNITS	1	1.00

ELEMENT	CD	DESCRIPTION	ADJ
FOUNDATION	4	FLR/WALL(FULL)	1.00
EXT COVER	1	WOOD SHINGLE	1.02
ROOF SHAPE	1	GABLE	1.00
ROOF COVER	1	ASPH/COMP SHIN	1.00
FLOOR COVER	1	HARDWOOD	1.02
INT. FINISH	2	DRYWALL	1.00
HEATING/COOLING	1	FORCED AIR	1.00
FUEL SOURCE	1	OIL	1.00
USE	0		1.00

S	BAT	T	DESCRIPTION	UNITS	YB	ADJ PRICE	RCN
+	BMU	N	BSMT UNFINISHED	816		42.15	34,395
+	BAS	L	BASE AREA	1,360	1978	217.30	295,523
+	USF	L	UPPER STORY FIN	612	1978	125.69	76,922
B	ENT	N	ENCLOSED ENTRY	30		97.72	2,932
C	WDK	N	WOOD DECK	214		29.94	6,406
+	CRL	N	BSMT CRAWL	544		29.70	16,154
E	OPA	N	OPEN PORCH	70		88.59	6,202
G	BMF	N	BSMT FINISH	336		67.54	22,695
	FIX	O	XTRA FIXTURES	3		2,461.77	7,385
	MST	O	MAS/METAL STACK	1		4,613.40	4,613

TOTAL RCN	473,228

CONDITION ELEM	CD
EXTERIOR	A
INTERIOR	G
KITCHEN	G
BATHS	G
HEAT	A
ELECT	A

EFF.YR/AGE	2002 / 20	
COND	17	17 %
FUNC	0	
ECON	0	
DEPR	17	% GD 83
RCNLD		$392,800