Key: 1213

Town of Bourne - Fiscal Year 2024

12/18/2023 6:02 pm SEQ #: 1,224

LEGAL

CURRENT OWNER	PARCEL ID	LOCATION
WILSON CHARLES S JR & ALICE T WILSON 190 OLD PLYMOUTH RD SAGAMORE BEACH, MA 02562	7.0-30-0	190 OLD PLYMOUTH RD

TRANSFER HISTORY	DOS	T	SALE PRICE	BK-PG (Cert)
WILSON CHARLES S JR &		XX		01421-0532

CLASS	CLASS%	DESCRIPTION	BN ID	BN	CARD
1010	100	SINGLE FAMILY		1	1 of 1

PMT NO	PMT DT	TY	DESC	AMOUNT	INSP	BY	1st	%
04879	11/30/2004	2	ADDITIONS	50,000	09/18/2006	DB	100	100
		13	OTHER				100	100
		3	ALT/RENO				100	100

LAND

CD	T	AC/SF/UN	Nbhd	Infl1	N_Index	ADJ BASE	SAF	Topo	Lpi	VC	CREDIT AMT	ADJ VALUE
100	S	23,598	1 1.00	100 1.00	100 1.00	235,700	1.49	A 1.00	R03 1.00			190,650

TOTAL	23,610 SF	ZONING	1	FRNT	151
Nbhd	N SAG	NOTE	Also frontage on Deacons Lane		
Infl1	AVG				
N_Index	AVG				

ASSESSED	CURRENT	PREVIOUS
LAND	190,700	168,700
BUILDING	461,500	412,800
DETACHED	14,000	11,100
OTHER	0	0
TOTAL	**666,200**	**592,600**

DETACHED

TY	QUAL	COND	DIM/NOTE	YB	UNITS	ADJ PRICE	RCNLD
DGF	A 1.00	10 0.90			384	40.60	14,000

PHOTO 12/31/2002

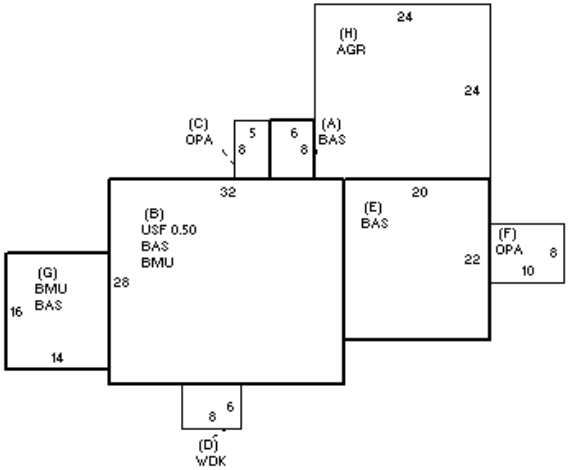

BLDG COMMENTS

BUILDING

BUILDING	CD	ADJ	DESC
MODEL	1		RESIDENTIAL
STYLE	4	1.05	CAPE [100%]
QUALITY	A	1.00	AVERAGE [100%]
FRAME	1	1.00	WOOD FRAME [100%]

MEASURE	12/29/2021	NMP
LIST	6/4/2020	EST
REVIEW		

YEAR BLT	1925	SIZE ADJ	1.005
NET AREA	2,056	DETAIL ADJ	1.000
$NLA(RCN)	$239	OVERALL	1.110

CAPACITY	UNITS	ADJ
STORIES	1.5	1.00
ROOMS	7	1.00
BEDROOMS	3	1.00
BATHROOMS	2	1.00
FIXTURES	11	1.00
GARAGE CAPACITY	1	1.00
% BSMT FINISH	0	1.00
# OF HALF BATHS	1	1.00
# OF UNITS	1	1.00

ELEMENT	CD	DESCRIPTION	ADJ
FOUNDATION	4	FLR/WALL(FULL)	1.00
EXT COVER	1	WOOD SHINGLE	1.02
ROOF SHAPE	1	GABLE	1.00
ROOF COVER	1	ASPH/COMP SHIN	1.00
FLOOR COVER	1	HARDWOOD	1.02
INT. FINISH	2	DRYWALL	1.00
HEATING/COOLING	2	HOT WATER	1.02
FUEL SOURCE	1	OIL	1.00
USE	0		1.00

S	BAT	T	DESCRIPTION	UNITS	YB	ADJ PRICE	RCN
+	BAS	L	BASE AREA	712	2005	201.42	143,411
+	BMU	N	BSMT UNFINISHED	1,120		40.68	45,560
B	BAS	L	BASE AREA	896	1925	201.42	180,473
B	USF	L	UPPER STORY FIN	448	2005	122.75	54,991
+	OPA	N	OPEN PORCH	120		76.55	9,185
D	WDK	N	WOOD DECK	48		70.72	3,395
H	AGR	N	ATT GARAGE	576		68.95	39,714
	FIX	O	XTRA FIXTURES	6		2,375.75	14,255

TOTAL RCN	490,983

CONDITION ELEM	CD
EXTERIOR	A
INTERIOR	A
KITCHEN	G
BATHS	G
HEAT	U
ELECT	U

EFF.YR/AGE	2013 / 9	
COND	6 6 %	
FUNC	0	
ECON	0	
DEPR	6	% GD 94
RCNLD		$461,500