Key: 14792

Town of Bourne - Fiscal Year 2024

12/18/2023 6:02 pm SEQ #: 11,696

LEGAL

CURRENT OWNER	PARCEL ID	LOCATION
PERRY ANITA M 21 SYCAMORE AVE SAGAMORE BEACH, MA 02562	3.0-250-0	21 SYCAMORE AVE

TRANSFER HISTORY	DOS	T	SALE PRICE	BK-PG (Cert)
PERRY ANITA M	02/28/2006	QS	610,000	20774-277
WIGBY JON I &	02/02/2001	QS	419,900	13536-296
CIMENO J SCOTT TR	11/23/1999	G	425,000	12682-13

CLASS	CLASS%	DESCRIPTION	BN ID	BN	CARD
1010	100	SINGLE FAMILY		1	1 of 1

PMT NO	PMT DT	TY	DESC	AMOUNT	INSP	BY	1st	%
01402	07/09/2001	4	DETACH.STRUC	330	10/18/2001	TL	100	100
200473	08/08/2000	1	NEW CONSTRUC	150,000	07/16/2001	TL	100	100

LAND

CD	T	AC/SF/UN	Nbhd		Infl1		N Index		ADJ BASE	SAF	Topo		Lpi		VC	CREDIT AMT	ADJ VALUE
100	S	40,000	1	1.00	100	1.00	100	1.00	259,270	1.00	A	1.00	R04	1.10			238,030
300	A	0.012	1	1.00	100	1.00	100	1.00	17,930	1.00	A	1.00	R04	1.10			220

TOTAL	40,511 SF	ZONING	1	FRNT	130
Nbhd	N SAG	NOTE			
Infl1	AVG				
N_Index	AVG				

ASSESSED	CURRENT	PREVIOUS
LAND	238,300	210,900
BUILDING	617,900	553,300
DETACHED	0	0
OTHER	0	0
TOTAL	**856,200**	**764,200**

DETACHED

TY	QUAL	COND	DIM/NOTE	YB	UNITS	ADJ PRICE	RCNLD

PHOTO 03/06/2014

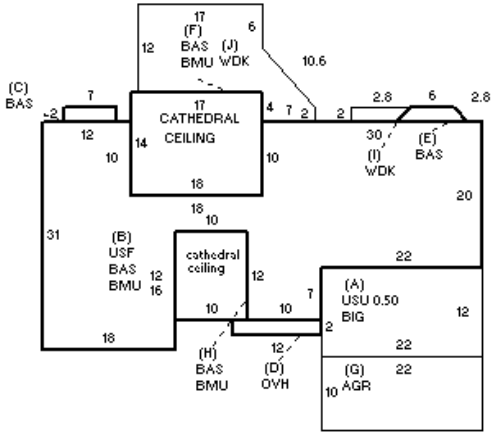

BUILDING

BUILDING	CD	ADJ	DESC
MODEL	1		RESIDENTIAL
STYLE	8	1.10	CONTEMPORARY [100%]
QUALITY	G	1.10	GOOD [100%]
FRAME	1	1.00	WOOD FRAME [100%]

MEASURE	1/19/2022	NMP
LIST	3/6/2014	TL
REVIEW	3/6/2014	TL

BLDG COMMENTS

YEAR BLT	2000	SIZE ADJ	1.000
NET AREA	2,902	DETAIL ADJ	1.000
$NLA(RCN)	$257	OVERALL	1.170

CAPACITY	UNITS	ADJ
STORIES	2	1.00
ROOMS	7	1.00
BEDROOMS	4	1.00
BATHROOMS	2	1.00
FIXTURES	10	1.00
GARAGE CAPACITY	2	1.00
% BSMT FINISH	0	1.00
# OF HALF BATHS	1	1.00
# OF UNITS	1	1.00

ELEMENT	CD	DESCRIPTION	ADJ
FOUNDATION	4	FLR/WALL(FULL)	1.00
EXT COVER	1	WOOD SHINGLE	1.02
ROOF SHAPE	1	GABLE	1.00
ROOF COVER	1	ASPH/COMP SHIN	1.00
FLOOR COVER	13	HARDWOOD-W/W	1.00
INT. FINISH	2	DRYWALL	1.00
HEATING/COOLING	11	HT WATER CL AIR	1.05
FUEL SOURCE	1	OIL	1.00
USE	0		1.00

S	BAT	T	DESCRIPTION	UNITS	YB	ADJ PRICE	RCN
A	BIG	N	BUILT-IN GARAGE	264		113.95	30,084
A	USU	N	UPPER STORY UNF	132		60.28	7,958
+	BMU	N	BSMT UNFINISHED	1,610		38.16	61,441
B	USF	L	UPPER STORY FIN	1,238	2000	133.81	165,652
+	BAS	L	BASE AREA	1,640	2000	232.38	381,097
D	OVH	L	OVERHANG	24	2000	233.05	5,593
G	AGR	N	ATT GARAGE	220		89.83	19,762
+	WDK	N	WOOD DECK	260		33.33	8,667
	BMF	N	BSMT FINISH	432		56.39	24,360
	F11	O	FPL 1S 1OP	1		10,319.20	10,319
	FIX	O	XTRA FIXTURES	5		2,740.80	13,704
	JAC	O	JACUZZI	1		15,804.40	15,804

TOTAL RCN	744,442

CONDITION ELEM	CD
EXTERIOR	A
INTERIOR	A
KITCHEN	A
BATHS	A
HEAT	A
ELECT	A

EFF.YR/AGE	2002 / 20		
COND	17	17 %	
FUNC	0		
ECON	0		
DEPR	17	% GD	83
RCNLD			$617,900