Key: 1573

Town of Bourne - Fiscal Year 2024

12/18/2023 6:02 pm SEQ #: 1.572

LEGAL

CURRENT OWNER	PARCEL ID	LOCATION
DONOVAN DANIEL J ETUX **JANICE E DONOVAN** **PO BOX 1148** **SAGAMORE BEACH, MA 02562**	**7.4-20-0**	**3 VINEYARD CIR**

TRANSFER HISTORY	DOS	T	SALE PRICE	BK-PG (Cert)
DONOVAN DANIEL J ETUX	01/24/2011	F	1	(193461)
VISCO DOMENICO	03/24/1995	XX		(136709)

CLASS	CLASS%	DESCRIPTION	BN ID	BN	CARD
1010	**100**	**SINGLE FAMILY**		**1**	**1 of 1**

PMT NO	PMT DT	TY	DESC	AMOUNT	INSP	BY	1st	%
151157	12/10/2015	1	NEW CONSTRUC	230,000	02/02/2018	BC	10	100
SS19-12		11	SPLITS/SUBS				100	100

LAND

CD	T	AC/SF/UN	Nbhd	Infl1	N_Index	ADJ BASE	SAF	Topo	Lpi	VC	CREDIT AMT	ADJ VALUE
100	S	40,033	1 1.00	100 1.00	100 1.00	259,270	1.00	A 1.00	R04 1.10			238,090

TOTAL	40,033 SF	ZONING	1	FRNT	238
Nbhd	N SAG	NOTE	combined from Map 7.4 Pcl 20		
Infl1	AVG				
N_Index	AVG				

ASSESSED	CURRENT	PREVIOUS
LAND	238,100	210,700
BUILDING	865,200	773,500
DETACHED	0	0
OTHER	0	0
TOTAL	**1,103,300**	**984,200**

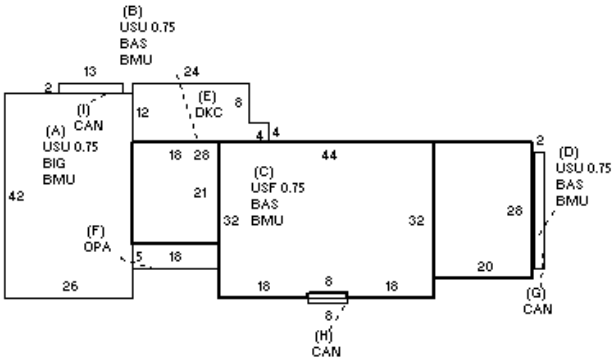

DETACHED

TY	QUAL	COND	DIM/NOTE	YB	UNITS	ADJ PRICE	RCNLD

PHOTO 09/05/2017

BLDG COMMENTS

BUILDING

BUILDING	CD	ADJ	DESC
MODEL	1		RESIDENTIAL
STYLE	4	1.05	CAPE [100%]
QUALITY	A	1.00	AVERAGE [100%]
FRAME	1	1.00	WOOD FRAME [100%]

MEASURE	1/19/2022	NMP
LIST	1/30/2019	BC
REVIEW	1/30/2019	BC

YEAR BLT	2016	SIZE ADJ	0.995
NET AREA	3,388	DETAIL ADJ	1.000
$NLA(RCN)	$263	OVERALL	1.100

CAPACITY	UNITS	ADJ
STORIES	1.75	1.00
ROOMS	9	1.00
BEDROOMS	4	1.00
BATHROOMS	3	1.00
FIXTURES	14	1.00
GARAGE CAPACITY	5	1.00
% BSMT FINISH	0	1.00
# OF HALF BATHS	1	1.00
# OF UNITS	1	1.00

ELEMENT	CD	DESCRIPTION	ADJ
FOUNDATION	4	FLR/WALL(FULL)	1.00
EXT COVER	4	VINYL	1.00
ROOF SHAPE	1	GABLE	1.00
ROOF COVER	1	ASPH/COMP SHIN	1.00
FLOOR COVER	1	HARDWOOD	1.02
INT. FINISH	2	DRYWALL	1.00
HEATING/COOLING	9	WARM-COOL AIR	1.03
FUEL SOURCE	2	GAS	1.00
USE	0		1.00

S	BAT	T	DESCRIPTION	UNITS	YB	ADJ PRICE	RCN
+	BMU	N	BSMT UNFINISHED	3,430		30.10	103,234
A	BIG	N	BUILT-IN GARAGE	1,092		76.61	83,656
+	USU	N	UPPER STORY UNF	1,523		48.44	73,772
+	BAS	L	BASE AREA	2,338	2016	188.11	439,790
C	USF	L	UPPER STORY FIN	1,050	2016	113.79	119,482
E	DKC	N	DECK-COMPOSITE	304		68.72	20,892
F	OPA	N	OPEN PORCH	90		78.66	7,079
G	CAN	N	CANOPY	48		14.94	717
H	CAN	N	CANOPY	8		16.96	136
I	CAN	N	CANOPY	26		14.94	389
	BMG	O	BSMT GARAGE	1		7,801.60	7,802
	FIX	O	XTRA FIXTURES	9		2,330.80	20,977
	GFP	O	GAS FIREPLACE	2		7,004.80	14,010

TOTAL RCN	891,934

CONDITION ELEM	CD
EXTERIOR	A
INTERIOR	A
KITCHEN	A
BATHS	A
HEAT	A
ELECT	A

EFF.YR/AGE	2016 / 6	
COND	3 3 %	
FUNC	0	
ECON	0	
DEPR	3	% GD 97
RCNLD		$865,200