Key: 2049

Town of Bourne - Fiscal Year 2024

12/18/2023 6:02 pm SEQ #: 2,060

LEGAL

CURRENT OWNER	PARCEL ID	LOCATION
CONSONI MARY E PO BOX 1 SAGAMORE, MA 02561	11.4-102-0	25 COMMONWEALTH AVE

TRANSFER HISTORY	DOS	T	SALE PRICE	BK-PG (Cert)
CONSONI MARY E CONSONI OLGA M	04/13/2022	A XX	300,000	35045-82 13496-00214

CLASS	CLASS%	DESCRIPTION	BN ID	BN	CARD
1010	100	SINGLE FAMILY		1	1 of 1

PMT NO	PMT DT	TY	DESC	AMOUNT	INSP	BY	1st	%
		13	OTHER		10/28/2016	DB	100	100

LAND

CD	T	AC/SF/UN	Nbhd	Infl1	N_Index	ADJ BASE	SAF	Topo	Lpi	VC	CREDIT AMT	ADJ VALUE
100	S	8,400	2 1.00	100 1.00	100 1.00	212,130	3.67	A 1.00	R04 0.90			150,120

TOTAL	8,407 SF	ZONING	1	FRNT	70
Nbhd	S SAG	NOTE			
Infl1	AVG				
N_Index	AVG				

ASSESSED	CURRENT	PREVIOUS
LAND	150,100	132,900
BUILDING	378,400	334,900
DETACHED	0	0
OTHER	0	0
TOTAL	**528,500**	**467,800**

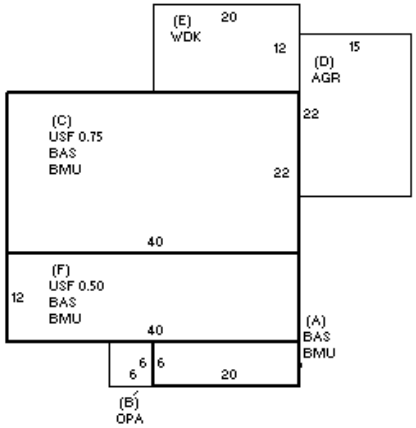

DETACHED

TY	QUAL	COND	DIM/NOTE	YB	UNITS	ADJ PRICE	RCNLD
SHF	A 1.00	A 0.75	8 X 10			0.00	

PHOTO 07/17/2008

BLDG COMMENTS

BUILDING

BUILDING	CD	ADJ	DESC
MODEL	1		RESIDENTIAL
STYLE	4	1.05	CAPE [100%]
QUALITY	A	1.00	AVERAGE [100%]
FRAME	1	1.00	WOOD FRAME [100%]

MEASURE	11/1/2016	TL
LIST	11/1/2016	TL
REVIEW		

YEAR BLT	1953	SIZE ADJ	1.005
NET AREA	2,380	DETAIL ADJ	1.000
$NLA(RCN)	$209	OVERALL	1.070

CAPACITY	UNITS	ADJ
STORIES	1.75	1.00
ROOMS	8	1.00
BEDROOMS	5	1.00
BATHROOMS	2	1.00
FIXTURES	8	1.00
GARAGE CAPACITY	1	1.00
% BSMT FINISH	0	1.00
# OF HALF BATHS	0	1.00
# OF UNITS	1	1.00

ELEMENT	CD	DESCRIPTION	ADJ
FOUNDATION	4	FLR/WALL(FULL)	1.00
EXT COVER	4	VINYL	1.00
ROOF SHAPE	1	GABLE	1.00
ROOF COVER	1	ASPH/COMP SHIN	1.00
FLOOR COVER	13	HARDWOOD-W/W	1.00
INT. FINISH	2	DRYWALL	1.00
HEATING/COOLING	2	HOT WATER	1.02
FUEL SOURCE	1	OIL	1.00
USE	0		1.00

S	BAT	T	DESCRIPTION	UNITS	YB	ADJ PRICE	RCN
+	BMU	N	BSMT UNFINISHED	1,480		34.35	50,844
+	BAS	L	BASE AREA	1,480	1953	197.28	291,970
B	OPA	N	OPEN PORCH	36		87.61	3,154
+	USF	L	UPPER STORY FIN	900	1953	115.76	104,185
D	AGR	N	ATT GARAGE	330		75.06	24,769
E	WDK	N	WOOD DECK	240		27.85	6,684
	F21	O	FPL 2S 1OP	1		9,472.80	9,473
	FIX	O	XTRA FIXTURES	3		2,290.13	6,870

TOTAL RCN	497,949

CONDITION ELEM	CD
EXTERIOR	A
INTERIOR	A
KITCHEN	A
BATHS	A
HEAT	A
ELECT	A

EFF.YR/AGE	1995 / 27	
COND	24	24 %
FUNC	0	
ECON	0	
DEPR	24	% GD 76
RCNLD		$378,400