Key: 210

Town of Bourne - Fiscal Year 2024

12/18/2023 6:02 pm SEQ #: 208

LEGAL

CURRENT OWNER	PARCEL ID	LOCATION
DOOLEY KEVIN TR OF STATE REALTY TRUST 159 PEMBROKE STREET KINGSTON, MA 02364	3.0-35-0	116 STATE RD

TRANSFER HISTORY	DOS	T	SALE PRICE	BK-PG (Cert)
DOOLEY KEVIN TR OF	01/27/2006	F	1	20691-106
DOOLEY KEVIN TR OF	01/27/2006	QS	1,100,000	20691-101
MORGAN JAMES A &		XX		02753-0073

CLASS	CLASS%	DESCRIPTION	BN ID	BN	CARD
3400	100	GEN OFFICE BLDGS		1	1 of 2

PMT NO	PMT DT	TY	DESC	AMOUNT	INSP	BY	1st	%
B-20-353	11/12/2020	3	ALT/RENO				100	100
07727	11/28/2007	7	SIGN		11/03/2008	JB	100	100
06496	08/10/2006	3	ALT/RENO	22,621	03/05/2007	MJ	100	100

LAND

CD	T	AC/SF/UN	Nbhd		Infl1		N_Index		ADJ BASE	SAF	Topo		Lpi		VC	CREDIT AMT	ADJ VALUE
103	S	20,000	C-1	1.00	100	1.00	100	1.00	614,925	1.48	A	1.00	75	1.35			418,560
203	A	0.371	C-1	1.00	100	1.00	100	1.00	215,325	1.00	A	1.00	75	1.35			79,890

TOTAL	36,155 SF	ZONING		FRNT	180
Nbhd	NO SAGAMORE	NOTE			
Infl1	AVG				
N_Index	AVG				

ASSESSED	CURRENT	PREVIOUS
LAND	498,500	479,300
BUILDING	402,800	367,900
DETACHED	6,900	6,400
OTHER	227,300	207,600
TOTAL	**1,135,500**	**1,061,200**

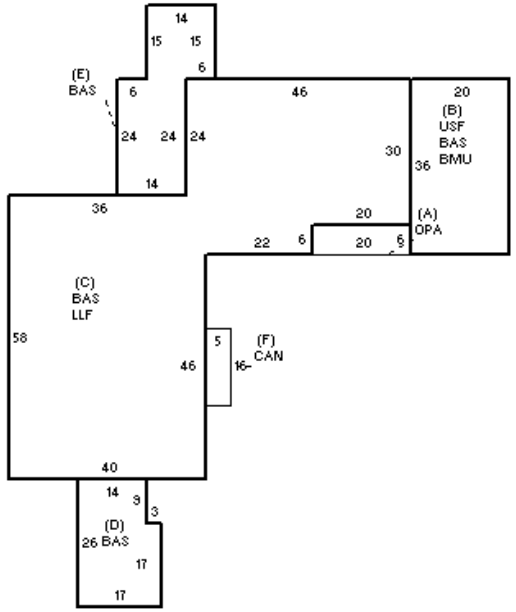

DETACHED

TY	QUAL		COND		DIM/NOTE	YB	UNITS	ADJ PRICE	RCNLD
SW2	A	1.00	10	0.90	6X8		48	21.80	900
PAV	A	1.00	50	0.50			10,000	1.20	6,000

PHOTO 07/16/2019

BLDG COMMENTS

BUILDING

BUILDING	CD	ADJ	DESC
MODEL	5		CIM-5
STYLE	20	1.05	OFFICE BUILDING [96%]
QUALITY	+	1.05	AVERAGE + [100%]
FRAME	1	1.00	WOOD FRAME [100%]

MEASURE	7/16/2017	RP
LIST	7/16/2019	EST
REVIEW		

YEAR BLT	1978	SIZE ADJ	1.000
NET AREA	10,017	DETAIL ADJ	1.009
$NLA(RCN)	$51	OVERALL	1.000

CAPACITY	UNITS	ADJ
STORIES	2	1.00
% HEATED	100	1.00
% AIR COND	0	1.00
% SPINKLERS	0	1.00

ELEMENT	CD	DESCRIPTION	ADJ
FOUNDATION	4	FLR & WALL	1.00
EXT. COVER	2	CLAPBOARD	1.00
ROOF SHAPE	1	GABLE	1.00
ROOF COVER	1	ASPH/CMP SHIN	1.00
FLOOR COVER	3	W/W CARPET	1.00
INT. FINISH	2	DRYWALL	1.00
HEATING/COOL	1	FORCED AIR	1.00
FUEL SOURCE	2	GAS	1.00
NAF	0		1.00

S	BAT	T	DESCRIPTION	UNITS	YB	ADJ PRICE	RCN
A	OPA	N	OPEN PORCH	120		16.91	2,029
B	BMU	N	BSMT UNF	720		18.40	13,248
B	USF	L	UP-STRY FIN	720	1978	48.78	35,118
C	LLF	L	LOW-LEV FIN	3,808	1978	32.76	124,756
D	BAS	L	BASE AREA	415	1978	57.52	23,870
+	BAS	L	BASE AREA	5,074	1978	57.52	291,841
F	CAN	N	CANOPY	80		13.65	1,092
	BIG	N	BUILT-IN GARAGE	720		24.82	17,869

TOTAL RCN	509,823
CONDITION ELEM	CD
EXTERIOR	G
INTERIOR	G
CDN/APP	G
EFF.YR/AGE	2001 / 21
COND	21 21 %
FUNC	0 uc
ECON	0
DEPR	21 % GD 79
RCNLD	$402,800

Key: **210**

Town of Bourne - Fiscal Year 2024

12/18/2023 6:02 pm SEQ #: 209

LEGAL

CURRENT OWNER	PARCEL ID	LOCATION
DOOLEY KEVIN TR OF STATE REALTY TRUST 159 PEMBROKE STREET KINGSTON, MA 02364	3.0-35-0	116 STATE RD

TRANSFER HISTORY	DOS	T	SALE PRICE	BK-PG (Cert)

CLASS	CLASS%	DESCRIPTION	BN ID	BN	CARD
3400	100	GEN OFFICE BLDGS		2	2 of 2

PMT NO	PMT DT	TY	DESC	AMOUNT	INSP	BY	1st	%

LAND

CD	T	AC/SF/UN	Nbhd	Infl1	N Index	ADJ BASE	SAF	Topo	Lpi	VC	CREDIT AMT	ADJ VALUE

TOTAL		ZONING		FRNT	
Nbhd		NOTE			
Infl1					
N_Index					

ASSESSED	CURRENT	PREVIOUS
LAND		
BUILDING	227,300	
DETACHED		
OTHER		
TOTAL		

DETACHED

TY	QUAL	COND	DIM/NOTE	YB	UNITS	ADJ PRICE	RCNLD

PHOTO 07/16/2019

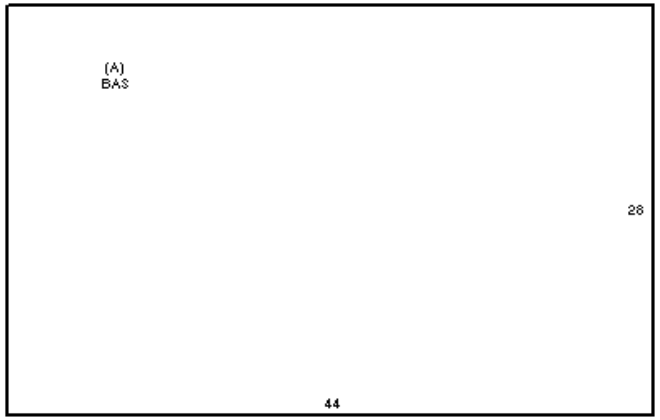

BUILDING

BUILDING	CD	ADJ	DESC
MODEL	5		CIM-5
STYLE	31	2.25	STORE(SM.RETAIL [100%]
QUALITY	G	1.10	GOOD [100%]
FRAME	1	1.00	WOOD FRAME [100%]

MEASURE	7/16/2019	RP
LIST	7/16/2019	EST
REVIEW		

BLDG COMMENTS

YEAR BLT	1985	SIZE ADJ	1.000
NET AREA	1,232	DETAIL ADJ	2.335
$NLA(RCN)	$225	OVERALL	1.000

CAPACITY	UNITS	ADJ
STORIES	1	1.00
% HEATED	100	1.00
% AIR COND	100	1.03
% SPINKLERS	0	1.00

ELEMENT	CD	DESCRIPTION	ADJ
FOUNDATION	2	SLAB	1.00
EXT. COVER	2	CLAPBOARD	1.00
ROOF SHAPE	1	GABLE	1.00
ROOF COVER	1	ASPH/CMP SHIN	1.00
FLOOR COVER	3	W/W CARPET	1.00
INT. FINISH	3	WOOD PANEL	1.05
HEATING/COOL	9	WARM/COOL AIR	1.00
FUEL SOURCE	2	GAS	1.00
NAF	0		1.00

S	BAT	T	DESCRIPTION	UNITS	YB	ADJ PRICE	RCN
A	BAS	L	BASE AREA	1,232	1985	224.95	277,136

TOTAL RCN	277,136
CONDITION ELEM	CD
EXTERIOR	G
INTERIOR	G
CDN/APP	G

EFF.YR/AGE	2004 / 18	
COND	18	18 %
FUNC	0	
ECON	0	
DEPR	18	% GD 82
RCNLD		$227,300