Key: 2170

Town of Bourne - Fiscal Year 2024

12/18/2023 6:02 pm SEQ #: 2,181

LEGAL

CURRENT OWNER	PARCEL ID	LOCATION
TOWN OF BOURNE 24 PERRY AVENUE BUZZARDS BAY, MA 02532	12.1-79-0	30 WILLISTON RD

TRANSFER HISTORY	DOS	T	SALE PRICE	BK-PG (Cert)
TOWN OF BOURNE	07/11/2018	E	1	31397-230
HOXIE CENTER AT SAGAMORE	07/09/2015	E	1	28999-33
TOWN OF BOURNE	07/20/1956	E		947-288

CLASS	CLASS%	DESCRIPTION	BN ID	BN	CARD
9430	100	OTHER EDUC	6	1	1 of 1

PMT NO	PMT DT	TY	DESC	AMOUNT	INSP	BY	1st	%
17571	07/22/2017	13	OTHER				100	100
16936	10/25/2016	13	OTHER		11/28/2016	BC	100	100
16409	05/19/2016	13	OTHER		11/28/2016	BC	100	100
151189	12/23/2015	13	OTHER		11/28/2016	BC	100	100
15954	10/22/2015	7	SIGN	300	11/28/2016	BC	100	100

LAND

CD	T	AC/SF/UN	Nbhd		Infl1		N_Index		ADJ BASE	SAF	Topo		Lpi		VC	CREDIT AMT	ADJ VALUE
103	S	40,000	C-1	1.00	100	1.00	100	1.00	455,500	1.04	A	1.00	55	1.00			436,130
203	A	0.892	C-1	1.00	100	1.00	100	1.00	159,500	1.00	A	1.00	55	1.00			142,270

TOTAL	1.810 Acres	ZONING	1	FRNT	285

Nbhd	NO SAGAMORE
Infl1	AVG
N_Index	AVG

NOTE: Also large frontage on School House Rd. School closed 2009

ASSESSED	CURRENT	PREVIOUS
LAND	578,400	556,200
BUILDING	1,319,600	1,204,800
DETACHED	15,600	14,300
OTHER	0	0
TOTAL	**1,913,600**	**1,775,300**

DETACHED

TY	QUAL		COND		DIM/NOTE	YB	UNITS	ADJ PRICE	RCNLD
PAV	A	1.00	50	0.50			26,000	1.20	15,600

PHOTO 11/28/2016

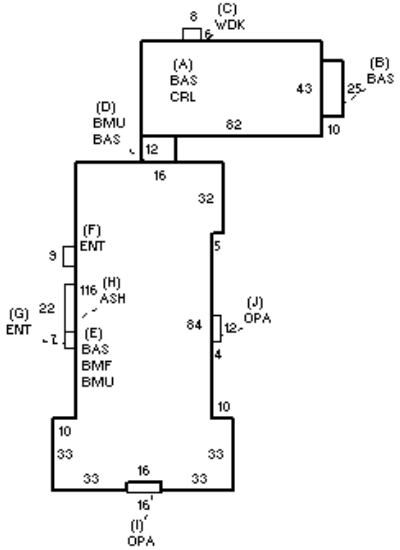

BUILDING

BUILDING	CD	ADJ	DESC
MODEL	5		CIM-5
STYLE	96	3.20	SCHOOLS [100%]
QUALITY	A	1.00	AVERAGE [100%]
FRAME	1	1.00	WOOD FRAME [100%]

MEASURE	4/5/2019	RP
LIST	4/5/2019	RP
REVIEW	8/2/2019	BC

BLDG COMMENTS

YEAR BLT	1909	SIZE ADJ	1.000
NET AREA	23,956	DETAIL ADJ	3.259
$NLA(RCN)	$141	OVERALL	1.015

CAPACITY	UNITS	ADJ
STORIES	1	1.00
% HEATED	100	1.00
% AIR COND	0	1.00
% SPINKLERS	100	1.02

ELEMENT	CD	DESCRIPTION	ADJ
FOUNDATION	4	FLR & WALL	1.00
EXT. COVER	1	WOOD SHINGLE	1.00
ROOF SHAPE	1	GABLE	1.00
ROOF COVER	1	ASPH/CMP SHIN	1.00
FLOOR COVER	5	VINYL	1.00
INT. FINISH	1	PLASTER	1.04
HEATING/COOL	4	STEAM	1.01
FUEL SOURCE	2	GAS	1.00
NAF	0		1.00

S	BAT	T	DESCRIPTION	UNITS	YB	ADJ PRICE	RCN
A	CRL	N	CRAWL	3,526		4.97	17,536
A	BAS	L	BASE AREA	3,526	1909	171.80	605,778
+	BAS	L	BASE AREA	10,436	1909	171.80	1,792,939
C	WDK	N	WOOD DECK	48		24.87	1,194
D	BMU	N	BSMT UNF	192		18.68	3,586
E	BMU	N	BSMT UNF	9,994		18.68	186,648
E	BMF	L	BSMT FIN	9,994	1909	69.27	692,295
+	ENT	N	ENCL ENTRY	89		28.42	2,529
H	ASH	N	ATT SHED	110		22.63	2,490
+	OPA	N	OPEN PORCH	128		16.34	2,092
	ATU	N	ATTIC UNF	3,536		20.20	71,422
	F11	O	FPL 1S 1OP	1		4,976.50	4,977

TOTAL RCN	3,383,485

CONDITION ELEM	CD
EXTERIOR	P
INTERIOR	F
CDN/APP	

EFF.YR/AGE	1957 / 65		
COND	56	56 %	
FUNC	5	Mech Sys Maint	
ECON	0		
DEPR	61	% GD	39
RCNLD	$1,319,600		