Key: 2333

Town of Bourne - Fiscal Year 2024

12/18/2023 6:02 pm SEQ #: 2,358

LEGAL

CURRENT OWNER	PARCEL ID	LOCATION
SAMMS BOPHA TRS SAMMS FAMILY TRUST PO BOX 226 SAGAMORE, MA 02561	12.3-129-0	9 PLEASURE POINT RD

TRANSFER HISTORY	DOS	T	SALE PRICE	BK-PG (Cert)
SAMMS BOPHA TRS	07/26/2021	F	10	(227035)
SAMMS SYBONARD AND	12/22/1998	G	48,000	(151388)

CLASS	CLASS%	DESCRIPTION	BN ID	BN	CARD
1010	100	SINGLE FAMILY		1	1 of 1

PMT NO	PMT DT	TY	DESC	AMOUNT	INSP	BY	1st	%
EXB-22-458	07/26/2022	14	SOLAR	59,000			100	100
14428	06/09/2014	15	INSULATE/WEA	3,163	08/28/2014		100	100
990199	04/28/1999	1	NEW CONSTRUC	165,000	11/08/1999	MS	100	100
		13	OTHER				100	100

LAND

CD	T	AC/SF/UN	Nbhd	Infl1	N_Index	ADJ BASE	SAF	Topo	Lpi	VC	CREDIT AMT	ADJ VALUE
100	S	22,164	2 1.00	100 1.00	100 1.00	212,130	1.57	A 1.00	R05 0.90			169,570

TOTAL	22,172 SF	ZONING	1	FRNT	125
Nbhd	S SAG	NOTE			
Infl1	AVG				
N_Index	AVG				

ASSESSED	CURRENT	PREVIOUS
LAND	169,600	150,100
BUILDING	521,500	467,100
DETACHED	0	0
OTHER	0	0
TOTAL	**691,100**	**617,200**

DETACHED

TY	QUAL	COND	DIM/NOTE	YB	UNITS	ADJ PRICE	RCNLD

PHOTO 06/25/2021

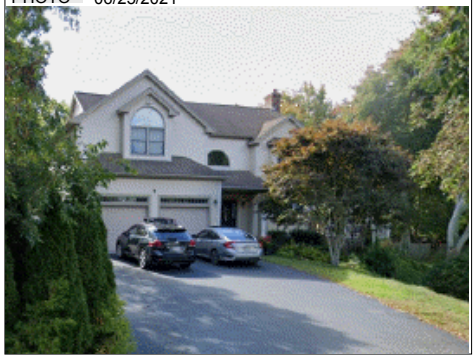

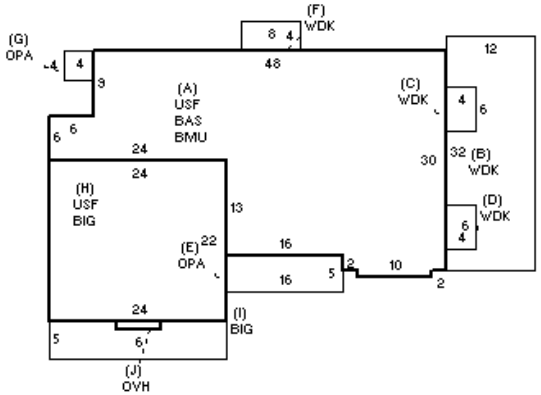

BLDG COMMENTS

BUILDING

BUILDING	CD	ADJ	DESC
MODEL	1		RESIDENTIAL
STYLE	5	1.00	COLONIAL [100%]
QUALITY	G	1.10	GOOD [100%]
FRAME	1	1.00	WOOD FRAME [100%]

MEASURE	6/25/2021	RP
LIST	6/25/2021	EST
REVIEW	6/25/2021	RP

YEAR BLT	1999	SIZE ADJ	1.000
NET AREA	2,902	DETAIL ADJ	1.000
$NLA(RCN)	$219	OVERALL	1.050

CAPACITY	UNITS	ADJ
STORIES	2	1.00
ROOMS	7	1.00
BEDROOMS	4	1.00
BATHROOMS	2	1.00
FIXTURES	12	1.00
GARAGE CAPACITY	2	1.00
% BSMT FINISH	0	1.00
# OF HALF BATHS	1	1.00
# OF UNITS	1	1.00

ELEMENT	CD	DESCRIPTION	ADJ
FOUNDATION	4	FLR/WALL(FULL)	1.00
EXT COVER	4	VINYL	1.00
ROOF SHAPE	1	GABLE	1.00
ROOF COVER	1	ASPH/COMP SHIN	1.00
FLOOR COVER	1	HARDWOOD	1.02
INT. FINISH	2	DRYWALL	1.00
HEATING/COOLING	9	WARM-COOL AIR	1.03
FUEL SOURCE	1	OIL	1.00
USE	0		1.00

S	BAT	T	DESCRIPTION	UNITS	YB	ADJ PRICE	RCN
A	BMU	N	BSMT UNFINISHED	1,184		42.12	49,866
A	BAS	L	BASE AREA	1,184	1999	221.72	262,518
+	USF	L	UPPER STORY FIN	1,712	1999	120.08	205,582
+	WDK	N	WOOD DECK	464		24.67	11,447
+	OPA	N	OPEN PORCH	96		83.00	7,968
H	BIG	N	BUILT-IN GARAGE	528		90.56	47,815
I	BIG	N	BUILT-IN GARAGE	120		125.60	15,072
J	OVH	L	OVERHANG	6	1999	209.25	1,256
	F21	O	FPL 2S 1OP	1		10,174.40	10,174
	FIX	O	XTRA FIXTURES	7		2,459.66	17,218
	HTB	O	HOT TUB	1		7,088.20	7,088

TOTAL RCN	636,003

CONDITION ELEM	CD
EXTERIOR	A
INTERIOR	A
KITCHEN	A
BATHS	A
HEAT	A
ELECT	A

EFF.YR/AGE	2001 / 21		
COND	18	18 %	
FUNC	0		
ECON	0		
DEPR	18	% GD	82
RCNLD			$521,500