**Key: 2918**

# Town of Bourne - Fiscal Year 2024

12/18/2023 6:02 pm SEQ #: 2,955

## LEGAL

| CURRENT OWNER | PARCEL ID | LOCATION |
|---|---|---|
| MIHALOVICH LEONARD L JR ETUX<br>CHERYL A MIHALOVICH<br>34 SETTLERS WAY<br>BOURNE, MA 02532 | 15.0-128-0 | 34 SETTLERS WAY |

| TRANSFER HISTORY | DOS | T | SALE PRICE | BK-PG (Cert) |
|---|---|---|---|---|
| MIHALOVICH LEONARD L JR E | 10/19/2012 | QS | 480,000 | 26778-47 |
| PILGRIM PINES LD LLC | 10/19/2012 | B | 15,459 | 26778-44 |
| HEBB BRIAN E TR OF | 10/23/2001 | G | 561,533 | 14354-99+ |

| CLASS | CLASS% | DESCRIPTION | BN ID | BN | CARD |
|---|---|---|---|---|---|
| 1010 | 100 | SINGLE FAMILY | | 1 | 1 of 1 |

| PMT NO | PMT DT | TY | DESC | AMOUNT | INSP | BY | 1st | % |
|---|---|---|---|---|---|---|---|---|
| 15437 | 06/05/2015 | 14 | SOLAR | 25,000 | | | 100 | 100 |
| 10392 | 07/06/2010 | 1 | NEW CONSTRUC | 166,000 | 07/02/2012 | TL | 100 | 100 |

## LAND

| CD | T | AC/SF/UN | Nbhd | Infl1 | N_Index | ADJ BASE | SAF | Topo | Lpi | VC | CREDIT AMT | ADJ VALUE |
|---|---|---|---|---|---|---|---|---|---|---|---|---|
| 100 | S | 20,995 | 4 1.00 | 100 1.00 | 100 1.00 | 259,270 | 1.64 | A 1.00 | R07 1.10 | | | 205,230 |

| TOTAL | 20,995 SF | ZONING | 1 | FRNT | 200 |
|---|---|---|---|---|---|
| Nbhd | BBAY | NOTE | | | |
| Infl1 | AVG | | | | |
| N_Index | AVG | | | | |

| ASSESSED | CURRENT | PREVIOUS |
|---|---|---|
| LAND | 205,200 | 198,100 |
| BUILDING | 576,400 | 540,100 |
| DETACHED | 0 | 0 |
| OTHER | 0 | 0 |
| TOTAL | **781,600** | **738,200** |

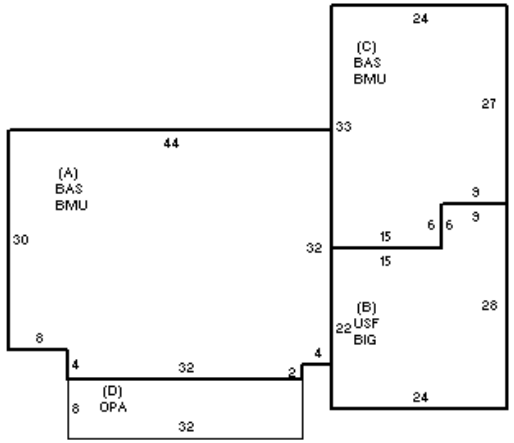


## DETACHED

| TY | QUAL | COND | DIM/NOTE | YB | UNITS | ADJ PRICE | RCNLD |
|---|---|---|---|---|---|---|---|

PHOTO 10/15/2012

BLDG COMMENTS

## BUILDING

| BUILDING | CD | ADJ | DESC |
|---|---|---|---|
| MODEL | 1 | | RESIDENTIAL |
| STYLE | 1 | 0.95 | RANCH [100%] |
| QUALITY | + | 1.05 | AVERAGE + [100%] |
| FRAME | 1 | 1.00 | WOOD FRAME [100%] |

| | | |
|---|---|---|
| MEASURE | 7/12/2017 | DB |
| LIST | 7/12/2017 | EST |
| REVIEW | 7/12/2017 | DB |

| | | | |
|---|---|---|---|
| YEAR BLT | 2012 | SIZE ADJ | 1.000 |
| NET AREA | 2,776 | DETAIL ADJ | 1.000 |
| $NLA(RCN) | $221 | OVERALL | 1.000 |

| CAPACITY | UNITS | ADJ |
|---|---|---|
| STORIES | 1 | 1.00 |
| ROOMS | 6 | 1.00 |
| BEDROOMS | 5 | 1.00 |
| BATHROOMS | 3 | 1.00 |
| FIXTURES | 14 | 1.00 |
| GARAGE CAPACITY | 2 | 1.00 |
| % BSMT FINISH | 0 | 1.00 |
| # OF HALF BATHS | 1 | 1.00 |
| # OF UNITS | 1 | 1.00 |

| ELEMENT | CD | DESCRIPTION | ADJ |
|---|---|---|---|
| FOUNDATION | 4 | FLR/WALL(FULL) | 1.00 |
| EXT COVER | 4 | VINYL | 1.00 |
| ROOF SHAPE | 1 | GABLE | 1.00 |
| ROOF COVER | 1 | ASPH/COMP SHIN | 1.00 |
| FLOOR COVER | 1 | HARDWOOD | 1.02 |
| INT. FINISH | 2 | DRYWALL | 1.00 |
| HEATING/COOLING | 9 | WARM-COOL AIR | 1.03 |
| FUEL SOURCE | 2 | GAS | 1.00 |
| USE | 0 | | 1.00 |

| S | BAT | T | DESCRIPTION | UNITS | YB | ADJ PRICE | RCN |
|---|---|---|---|---|---|---|---|
| + | BMU | N | BSMT UNFINISHED | 2,194 | | 30.17 | 66,195 |
| + | BAS | L | BASE AREA | 2,194 | 2012 | 180.46 | 395,923 |
| B | BIG | N | BUILT-IN GARAGE | 582 | | 82.32 | 47,913 |
| B | USF | L | UPPER STORY FIN | 582 | 2012 | 115.53 | 67,241 |
| D | OPA | N | OPEN PORCH | 256 | | 61.79 | 15,819 |
| | FIX | O | XTRA FIXTURES | 9 | | 2,236.03 | 20,124 |

TOTAL RCN 613,215

| CONDITION ELEM | CD |
|---|---|
| EXTERIOR | A |
| INTERIOR | A |
| KITCHEN | A |
| BATHS | A |
| HEAT | A |
| ELECT | A |

EFF.YR/AGE 2013 / 9

| | | | |
|---|---|---|---|
| COND | 6 6 % | | |
| FUNC | 0 | | |
| ECON | 0 | | |
| DEPR | 6 | % GD | 94 |

RCNLD $576,400