**Key: 2921**

# Town of Bourne - Fiscal Year 2024

12/18/2023 6:02 pm SEQ #: 2,958

## LEGAL

| CURRENT OWNER | PARCEL ID | LOCATION |
|---|---|---|
| JOHNSON WESLEY H JR TRS<br>WESLEY JOHNSON LIVING TRUST<br>28 SETTLERS WAY<br>BOURNE, MA 02532 | 15.0-131-0 | 28 SETTLERS WAY |

| TRANSFER HISTORY | DOS | T | SALE PRICE | BK-PG (Cert) |
|---|---|---|---|---|
| JOHNSON WESLEY H JR TRS | 11/16/2021 | F | 1 | 34667-126 |
| JOHNSON WESLEY H ETUX | 07/23/2012 | QS | 359,900 | 26519-239 |
| PILGRIM PINES LD LLC | 07/23/2012 | B | 15,459 | 26519-236 |

| CLASS | CLASS% | DESCRIPTION | BN ID | BN | CARD |
|---|---|---|---|---|---|
| 1010 | 100 | SINGLE FAMILY | | 1 | 1 of 1 |

| PMT NO | PMT DT | TY | DESC | AMOUNT | INSP | BY | 1st | % |
|---|---|---|---|---|---|---|---|---|
| 12723 | 10/11/2012 | 4 | DETACH.STRUC | 3,500 | 07/03/2013 | DB | 100 | 100 |
| 11577 | 09/28/2011 | 1 | NEW CONSTRUC | 120,000 | 07/02/2012 | TL | 100 | 100 |

## LAND

| CD | T | AC/SF/UN | Nbhd | Infl1 | N_Index | ADJ BASE | SAF | Topo | Lpi | VC | CREDIT AMT | ADJ VALUE |
|---|---|---|---|---|---|---|---|---|---|---|---|---|
| 100 | S | 20,000 | 4 1.00 | 100 1.00 | 100 1.00 | 259,270 | 1.71 | A 1.00 | R07 1.10 | | | 203,510 |

| TOTAL | 20,000 SF | ZONING | 1 | FRNT | 110 |
|---|---|---|---|---|---|

| | |
|---|---|
| Nbhd | BBAY |
| Infl1 | AVG |
| N_Index | AVG |

NOTE

| ASSESSED | CURRENT | PREVIOUS |
|---|---|---|
| LAND | 203,500 | 196,500 |
| BUILDING | 417,300 | 373,200 |
| DETACHED | 3,400 | 3,200 |
| OTHER | 0 | 0 |
| TOTAL | **624,200** | **572,900** |

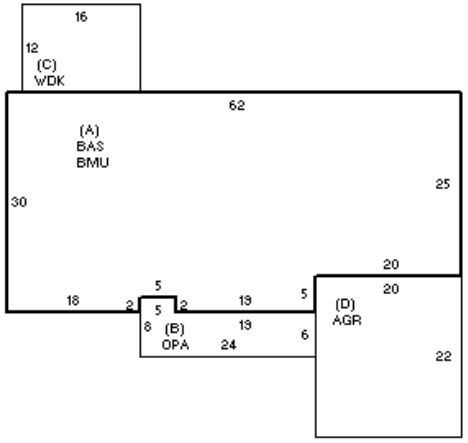


## DETACHED

| TY | QUAL | COND | DIM/NOTE | YB | UNITS | ADJ PRICE | RCNLD |
|---|---|---|---|---|---|---|---|
| SHF | E 1.90 | 10 0.90 | 10X12 | 2012 | 120 | 31.20 | 3,400 |

PHOTO 09/20/2012

BLDG COMMENTS

## BUILDING

| BUILDING | CD | ADJ | DESC |
|---|---|---|---|
| MODEL | 1 | | RESIDENTIAL |
| STYLE | 1 | 0.95 | RANCH [100%] |
| QUALITY | + | 1.05 | AVERAGE + [100%] |
| FRAME | 1 | 1.00 | WOOD FRAME [100%] |

| | | |
|---|---|---|
| MEASURE | 9/20/2014 | TL |
| LIST | 10/11/2014 | EST |
| REVIEW | | |

| | | | |
|---|---|---|---|
| YEAR BLT | 2012 | SIZE ADJ | 1.010 |
| NET AREA | 1,750 | DETAIL ADJ | 1.000 |
| $NLA(RCN) | $254 | OVERALL | 1.000 |

| CAPACITY | UNITS | ADJ |
|---|---|---|
| STORIES | 1 | 1.00 |
| ROOMS | 5 | 1.00 |
| BEDROOMS | 3 | 1.00 |
| BATHROOMS | 2 | 1.00 |
| FIXTURES | 8 | 1.00 |
| GARAGE CAPACITY | 2 | 1.00 |
| % BSMT FINISH | 0 | 1.00 |
| # OF HALF BATHS | 0 | 1.00 |
| # OF UNITS | 1 | 1.00 |

| ELEMENT | CD | DESCRIPTION | ADJ |
|---|---|---|---|
| FOUNDATION | 4 | FLR/WALL(FULL) | 1.00 |
| EXT COVER | 4 | VINYL | 1.00 |
| ROOF SHAPE | 1 | GABLE | 1.00 |
| ROOF COVER | 1 | ASPH/COMP SHIN | 1.00 |
| FLOOR COVER | 1 | HARDWOOD | 1.02 |
| INT. FINISH | 1 | PLASTER | 1.00 |
| HEATING/COOLING | 9 | WARM-COOL AIR | 1.03 |
| FUEL SOURCE | 2 | GAS | 1.00 |
| USE | 0 | | 1.00 |

| S | BAT | T | DESCRIPTION | UNITS | YB | ADJ PRICE | RCN |
|---|---|---|---|---|---|---|---|
| A | BMU | N | BSMT UNFINISHED | 1,750 | | 31.45 | 55,030 |
| A | BAS | L | BASE AREA | 1,750 | 2012 | 187.83 | 328,705 |
| B | OPA | N | OPEN PORCH | 154 | | 69.31 | 10,674 |
| C | WDK | N | WOOD DECK | 192 | | 37.10 | 7,122 |
| D | AGR | N | ATT GARAGE | 440 | | 65.54 | 28,839 |
| | FIX | O | XTRA FIXTURES | 3 | | 2,258.50 | 6,776 |
| | GFP | O | GAS FIREPLACE | 1 | | 6,787.20 | 6,787 |

| TOTAL RCN | 443,934 |
|---|---|

| CONDITION ELEM | CD |
|---|---|
| EXTERIOR | A |
| INTERIOR | A |
| KITCHEN | A |
| BATHS | A |
| HEAT | A |
| ELECT | A |

| EFF.YR/AGE | 2013 / 9 | | |
|---|---|---|---|
| COND | 6 6 % | | |
| FUNC | 0 | | |
| ECON | 0 | | |
| DEPR | 6 | % GD | 94 |
| RCNLD | $417,300 | | |