Key: 339

Town of Bourne - Fiscal Year 2024

12/18/2023 6:02 pm SEQ #: 336

LEGAL

CURRENT OWNER	PARCEL ID	LOCATION
FINN WILLIAM J ETUX KIMBERLY FINN 8 CLAPP LN SAGAMORE BEACH, MA 02562	4.0-1-6	8 CLAPP LN

TRANSFER HISTORY	DOS	T	SALE PRICE	BK-PG (Cert)
FINN WILLIAM J ETUX	07/07/2017	F	1	30614-166
FINN WILLIAM J	06/30/2017	QS	420,000	30601-231
ROTHEMICH KEVIN J	05/31/2013	QS	385,000	27420-292

CLASS	CLASS%	DESCRIPTION	BN ID	BN	CARD
1010	100	SINGLE FAMILY		1	1 of 1

PMT NO	PMT DT	TY	DESC	AMOUNT	INSP	BY	1st	%
17692	09/05/2017	3	ALT/RENO	42,000	11/06/2017	BC	100	100
		12	CYCLICAL		08/10/2016		100	100
05228	04/12/2005	2	ADDITIONS	30,000	09/14/2006	TL	100	100
940382	08/18/1994	1	NEW CONSTRUC	102,000	11/28/1995	JC	100	100

LAND

CD	T	AC/SF/UN	Nbhd	Infl1	N_Index	ADJ BASE	SAF	Topo	Lpi	VC	CREDIT AMT	ADJ VALUE
100	S	20,044	1 1.00	100 1.00	100 1.00	259,270	1.71	A 1.00	R04 1.10			203,590

TOTAL	20,038 SF	ZONING	1	FRNT	204
Nbhd	N SAG	NOTE			
Infl1	AVG				
N_Index	AVG				

ASSESSED	CURRENT	PREVIOUS
LAND	203,600	180,200
BUILDING	483,400	427,700
DETACHED	0	0
OTHER	0	0
TOTAL	687,000	607,900

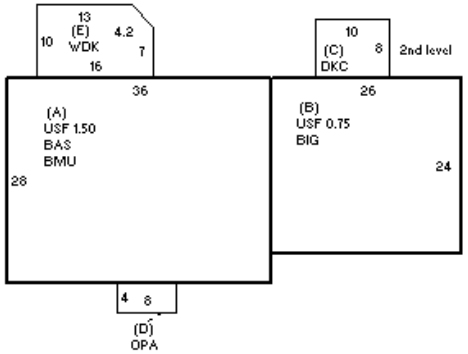

DETACHED

TY	QUAL	COND	DIM/NOTE	YB	UNITS	ADJ PRICE	RCNLD

PHOTO 11/07/2017

BLDG COMMENTS

BUILDING

BUILDING	CD	ADJ	DESC
MODEL	1		RESIDENTIAL
STYLE	5	1.00	COLONIAL [100%]
QUALITY	+	1.05	AVERAGE + [100%]
FRAME	1	1.00	WOOD FRAME [100%]

MEASURE	7/9/2021	NMP
LIST	11/6/2017	BC
REVIEW	11/6/2017	BC

YEAR BLT	1994	SIZE ADJ	1.000
NET AREA	2,988	DETAIL ADJ	1.000
$NLA(RCN)	$193	OVERALL	1.040

CAPACITY	UNITS	ADJ
STORIES	2.5	1.00
ROOMS	9	1.00
BEDROOMS	6	1.00
BATHROOMS	2	1.00
FIXTURES	10	1.00
GARAGE CAPACITY	2	1.00
% BSMT FINISH	0	1.00
# OF HALF BATHS	1	1.00
# OF UNITS	1	1.00

ELEMENT	CD	DESCRIPTION	ADJ
FOUNDATION	4	FLR/WALL(FULL)	1.00
EXT COVER	4	VINYL	1.00
ROOF SHAPE	1	GABLE	1.00
ROOF COVER	1	ASPH/COMP SHIN	1.00
FLOOR COVER	1	HARDWOOD	1.02
INT. FINISH	2	DRYWALL	1.00
HEATING/COOLING	2	HOT WATER	1.02
FUEL SOURCE	2	GAS	1.00
USE	0		1.00

S	BAT	T	DESCRIPTION	UNITS	YB	ADJ PRICE	RCN
A	BMU	N	BSMT UNFINISHED	1,008		39.82	40,139
A	BAS	L	BASE AREA	1,008	1994	209.63	211,304
+	USF	L	UPPER STORY FIN	1,980	1994	113.53	224,796
B	BIG	N	BUILT-IN GARAGE	624		80.53	50,253
C	DKC	N	DECK-COMPOSITE	80		68.56	5,485
D	OPA	N	OPEN PORCH	32		88.96	2,847
E	WDK	N	WOOD DECK	156		38.19	5,958
	F21	O	FPL 2S 1OP	1		9,619.40	9,619
	FIX	O	XTRA FIXTURES	5		2,325.52	11,628
	JAC	O	JACUZZI	1		13,409.80	13,410

TOTAL RCN	575,438

CONDITION ELEM	CD
EXTERIOR	A
INTERIOR	A
KITCHEN	G
BATHS	G
HEAT	A
ELECT	A

EFF.YR/AGE	2003 / 19	
COND	16	16 %
FUNC	0	
ECON	0	
DEPR	16	% GD 84
RCNLD		$483,400