Key: 3589

Town of Bourne - Fiscal Year 2024

12/18/2023 6:02 pm SEQ #: 3,640

LEGAL

CURRENT OWNER	PARCEL ID	LOCATION
DOWNEY STEVEN M ETUX MAUREEN M DOWNEY 12 BOSUNS LANE BOURNE, MA 02532	19.3-156-0	3 CROWS NEST DR

TRANSFER HISTORY	DOS	T	SALE PRICE	BK-PG (Cert)
DOWNEY STEVEN M ETUX	07/09/2013	F	100	(200844)
DOWNEY STEVEN M & MAUREEN	08/11/2010	F	100	(192140)
DOWNEY STEVEN M &	08/20/1993	QS	115,000	(140910)

CLASS	CLASS%	DESCRIPTION	BN ID	BN	CARD
1010	100	SINGLE FAMILY		1	1 of 1

PMT NO	PMT DT	TY	DESC	AMOUNT	INSP	BY	1st	%
13801	11/18/2013	15	INSULATE/WEA	2,000			100	100
12638	09/12/2012	3	ALT/RENO	8,000			100	100
960130	04/23/1996	3	ALT/RENO	3,245	04/15/1997	JS	100	100

LAND

CD	T	AC/SF/UN	Nbhd	Infl1	N_Index	ADJ BASE	SAF	Topo	Lpi	VC	CREDIT AMT	ADJ VALUE
100	S	14,400	4 1.00	100 1.00	100 1.00	235,700	2.26	A 1.00	R03 1.00			176,220

TOTAL	14,418 SF	ZONING	1	FRNT	119

Nbhd	BBAY
Infl1	AVG
N_Index	AVG

NOTE

ASSESSED	CURRENT	PREVIOUS
LAND	176,200	156,000
BUILDING	359,400	318,000
DETACHED	8,500	8,100
OTHER	0	0
TOTAL	**544,100**	**482,100**

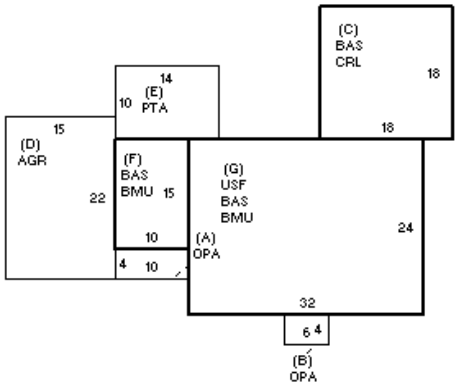

DETACHED

TY	QUAL	COND	DIM/NOTE	YB	UNITS	ADJ PRICE	RCNLD
IPG	A 1.00	50 0.50	18 X 36		648	26.10	8,500
SHF	A 1.00	50 0.50	8 X 12			0.00	

PHOTO 08/02/2022

BLDG COMMENTS

BUILDING

BUILDING	CD	ADJ	DESC
MODEL	1		RESIDENTIAL
STYLE	5	1.00	COLONIAL [100%]
QUALITY	A	1.00	AVERAGE [100%]
FRAME	1	1.00	WOOD FRAME [100%]

MEASURE	8/2/2022	SL
LIST	8/2/2022	EST
REVIEW	8/16/2022	TL

YEAR BLT	1964	SIZE ADJ	1.005
NET AREA	2,010	DETAIL ADJ	1.000
$NLA(RCN)	$224	OVERALL	1.040

CAPACITY	UNITS	ADJ
STORIES	2	1.00
ROOMS	8	1.00
BEDROOMS	4	1.00
BATHROOMS	2	1.00
FIXTURES	10	1.00
GARAGE CAPACITY	1	1.00
% BSMT FINISH	0	1.00
# OF HALF BATHS	1	1.00
# OF UNITS	1	1.00

ELEMENT	CD	DESCRIPTION	ADJ
FOUNDATION	4	FLR/WALL(FULL)	1.00
EXT COVER	1	WOOD SHINGLE	1.02
ROOF SHAPE	3	GAMBREL	1.00
ROOF COVER	1	ASPH/COMP SHIN	1.00
FLOOR COVER	3	W/W CARPET	1.00
INT. FINISH	2	DRYWALL	1.00
HEATING/COOLING	2	HOT WATER	1.02
FUEL SOURCE	2	GAS	1.00
USE	0		1.00

S	BAT	T	DESCRIPTION	UNITS	YB	ADJ PRICE	RCN
+	OPA	N	OPEN PORCH	64		80.10	5,127
C	CRL	N	BSMT CRAWL	324		35.81	11,602
+	BAS	L	BASE AREA	1,242	1964	196.48	244,026
D	AGR	N	ATT GARAGE	330		72.95	24,074
E	PTA	N	PATIO	140		14.93	2,090
+	BMU	N	BSMT UNFINISHED	918		38.11	34,988
G	USF	L	UPPER STORY FIN	768	1964	113.65	87,282
	BMF	N	BSMT FINISH	432		45.80	19,784
	F21	O	FPL 2S 1OP	1		9,207.20	9,207
	FIX	O	XTRA FIXTURES	5		2,225.86	11,129

TOTAL RCN	449,309

CONDITION ELEM	CD
EXTERIOR	A
INTERIOR	A
KITCHEN	G
BATHS	G
HEAT	A
ELECT	A

EFF.YR/AGE	1999 / 23		
COND	20	20 %	
FUNC	0		
ECON	0		
DEPR	20	% GD	80
RCNLD			$359,400