Key: 382

Town of Bourne - Fiscal Year 2024

12/18/2023 6:02 pm SEQ #: 379

LEGAL

CURRENT OWNER	PARCEL ID	LOCATION
STOCK GREGORY &	4.0-46-0	12 NOREAST DR
MARY F STOCK		
12 NOREAST DRIVE		
SAGAMORE BEACH, MA 02562-2500		

TRANSFER HISTORY	DOS	T	SALE PRICE	BK-PG (Cert)
STOCK GREGORY &	01/01/1987	O	64,900	6111-311

CLASS	CLASS%	DESCRIPTION	BN ID	BN	CARD
1010	100	SINGLE FAMILY		1	1 of 1

PMT NO	PMT DT	TY	DESC	AMOUNT	INSP	BY	1st	%
19962	10/16/2019	3	ALT/RENO	19,412			100	100
		12	CYCLICAL		11/15/2017	BC	100	100
930458	08/30/1993	3	ALT/RENO	13,750	11/18/1993	JS	100	100

LAND

CD	T	AC/SF/UN	Nbhd	Infl1	N_Index	ADJ BASE	SAF	Topo	Lpi	VC	CREDIT AMT	ADJ VALUE
100	S	15,684	1 1.00	100 1.00	100 1.00	259,270	2.10	A 1.00	R04 1.10			196,060

TOTAL	15,682 SF	ZONING	1	FRNT	110
Nbhd	N SAG	NOTE			
Infl1	AVG				
N_Index	AVG				

ASSESSED	CURRENT	PREVIOUS
LAND	196,100	173,500
BUILDING	413,000	370,100
DETACHED	8,000	9,200
OTHER	0	0
TOTAL	**617,100**	**552,800**

DETACHED

TY	QUAL	COND	DIM/NOTE	YB	UNITS	ADJ PRICE	RCNLD
IPG	A 1.00	50 0.50	16 X 36		576	27.91	8,000
SHF	A 1.00	50 0.50	8 X 10			0.00	

PHOTO 11/15/2017

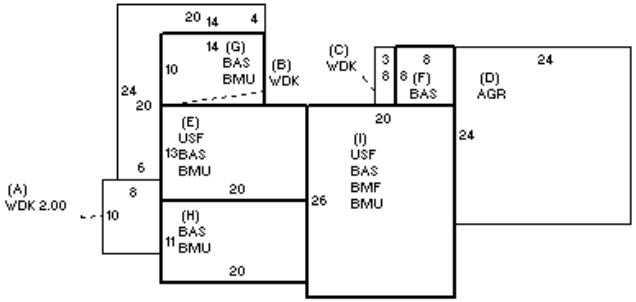

BUILDING

BUILDING	CD	ADJ	DESC
MODEL	1		RESIDENTIAL
STYLE	8	1.10	CONTEMPORARY [100%]
QUALITY	+	1.05	AVERAGE + [100%]
FRAME	1	1.00	WOOD FRAME [100%]

MEASURE	12/17/2021	NMP
LIST	11/15/2017	EST
REVIEW	11/15/2017	BC

BLDG COMMENTS

YEAR BLT	1988	SIZE ADJ	1.010
NET AREA	1,984	DETAIL ADJ	1.000
$NLA(RCN)	$267	OVERALL	1.140

CAPACITY	UNITS	ADJ
STORIES	2	1.00
ROOMS	7	1.00
BEDROOMS	3	1.00
BATHROOMS	2	1.00
FIXTURES	10	1.00
GARAGE CAPACITY	2	1.00
% BSMT FINISH	0	1.00
# OF HALF BATHS	1	1.00
# OF UNITS	1	1.00

ELEMENT	CD	DESCRIPTION	ADJ
FOUNDATION	4	FLR/WALL(FULL)	1.00
EXT COVER	1	WOOD SHINGLE	1.02
ROOF SHAPE	1	GABLE	1.00
ROOF COVER	1	ASPH/COMP SHIN	1.00
FLOOR COVER	13	HARDWOOD-W/W	1.00
INT. FINISH	2	DRYWALL	1.00
HEATING/COOLING	2	HOT WATER	1.02
FUEL SOURCE	2	GAS	1.00
USE	0		1.00

S	BAT	T	DESCRIPTION	UNITS	YB	ADJ PRICE	RCN
+	WDK	N	WOOD DECK	384		25.82	9,916
D	AGR	N	ATT GARAGE	576		74.72	43,039
+	BMU	N	BSMT UNFINISHED	1,140		44.09	50,257
+	USF	L	UPPER STORY FIN	780	1988	131.46	102,535
+	BAS	L	BASE AREA	1,204	1988	227.26	273,626
I	BMF	N	BSMT FINISH	520		52.97	27,544
	F11	O	FPL 1S 1OP	1		9,693.50	9,694
	FIX	O	XTRA FIXTURES	5		2,574.62	12,873

TOTAL RCN	529,484

CONDITION ELEM	CD
EXTERIOR	A
INTERIOR	A
KITCHEN	A
BATHS	A
HEAT	A
ELECT	A

EFF.YR/AGE	1997 / 25		
COND	22	22 %	
FUNC	0		
ECON	0		
DEPR	22	% GD	78
RCNLD			$413,000