Key: 3915

Town of Bourne - Fiscal Year 2024

12/18/2023 6:02 pm SEQ #: 3,979

LEGAL

CURRENT OWNER	PARCEL ID	LOCATION
RICHARDSON DIANA M, ROBERTA J OGLETREE & DEBRA M ARAI TRS* 1 SHAMROCK LN BUZZARDS BAY, MA 02532	19.4-303-0	1 SHAMROCK LN

TRANSFER HISTORY	DOS	T	SALE PRICE	BK-PG (Cert)
RICHARDSON DIANA M, ROBER	07/18/2011	N	10	25569-211
ANDRADE JOHN P AND	09/17/1982	QS	12,500	3562-153

CLASS	CLASS%	DESCRIPTION	BN ID	BN	CARD
1010	100	SINGLE FAMILY		1	1 of 1

PMT NO	PMT DT	TY	DESC	AMOUNT	INSP	BY	1st	%
EXB-21-6	01/05/2021	15	INSULATE/WEA	2,960			100	100
14892	10/20/2014	3	ALT/RENO	16,300	04/24/2018	BC	100	100

LAND

CD	T	AC/SF/UN	Nbhd	Infl1	N_Index	ADJ BASE	SAF	Topo	Lpi	VC	CREDIT AMT	ADJ VALUE
100	S	26,354	4 1.00	100 1.00	100 1.00	235,700	1.37	A 1.00	R03 1.00			194,980

TOTAL	26,354 SF	ZONING	1	FRNT	170
Nbhd	BBAY	NOTE			
Infl1	AVG				
N_Index	AVG				

ASSESSED	CURRENT	PREVIOUS
LAND	195,000	172,600
BUILDING	298,200	263,900
DETACHED	2,600	2,400
OTHER	0	0
TOTAL	**495,800**	**438,900**

DETACHED

TY	QUAL	COND	DIM/NOTE	YB	UNITS	ADJ PRICE	RCNLD
SHF	A 1.00	A 0.75	14X16		224	15.23	2,600

PHOTO 04/24/2018

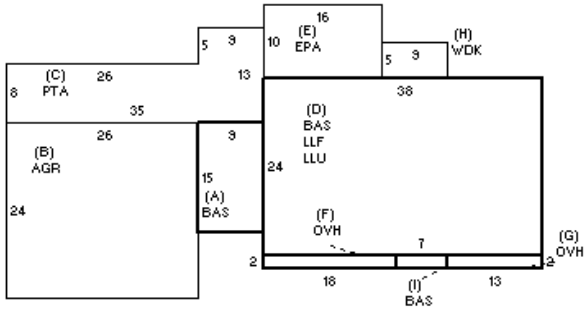

BUILDING

BUILDING	CD	ADJ	DESC
MODEL	1		RESIDENTIAL
STYLE	2	1.00	RAISED RANCH [100%]
QUALITY	A	1.00	AVERAGE [100%]
FRAME	1	1.00	WOOD FRAME [100%]

MEASURE	4/24/2018	BC
LIST	4/24/2018	BC
REVIEW	7/23/2018	DB

BLDG COMMENTS

YEAR BLT	1982	SIZE ADJ	1.005
NET AREA	2,035	DETAIL ADJ	1.000
$NLA(RCN)	$183	OVERALL	1.020

CAPACITY	UNITS	ADJ
STORIES	1	1.00
ROOMS	6	1.00
BEDROOMS	3	1.00
BATHROOMS	2	1.00
FIXTURES	8	1.00
GARAGE CAPACITY	2	1.00
% BSMT FINISH	75	1.00
# OF HALF BATHS	0	1.00
# OF UNITS	1	1.00

ELEMENT	CD	DESCRIPTION	ADJ
FOUNDATION	4	FLR/WALL(FULL)	1.00
EXT COVER	4	VINYL	1.00
ROOF SHAPE	1	GABLE	1.00
ROOF COVER	1	ASPH/COMP SHIN	1.00
FLOOR COVER	3	W/W CARPET	1.00
INT. FINISH	2	DRYWALL	1.00
HEATING/COOLING	2	HOT WATER	1.02
FUEL SOURCE	2	GAS	1.00
USE	0		1.00

S	BAT	T	DESCRIPTION	UNITS	YB	ADJ PRICE	RCN
+	BAS	L	BASE AREA	1,061	1982	196.78	208,788
B	AGR	N	ATT GARAGE	624		59.59	37,187
C	PTA	N	PATIO	325		13.94	4,530
D	LLU	N	LOWER LEVEL UNF	912		32.84	29,953
D	LLF	L	LOWER LEVEL FIN	912	1982	55.89	50,976
E	EPA	N	ENCLOSED PORCH	160		75.65	12,103
+	OVH	L	OVERHANG	62	1982	185.64	11,510
H	WDK	N	WOOD DECK	45		64.97	2,924
	F11	O	FPL 1S 1OP	1		8,219.30	8,219
	FIX	O	XTRA FIXTURES	3		2,183.13	6,549

TOTAL RCN	372,740
CONDITION ELEM	CD
EXTERIOR	G
INTERIOR	A
KITCHEN	A
BATHS	A
HEAT	A
ELECT	A

EFF.YR/AGE	1999 / 23	
COND	20	20 %
FUNC	0	
ECON	0	
DEPR	20	% GD 80
RCNLD		$298,200