Key: 4004

Town of Bourne - Fiscal Year 2024

12/18/2023 6:02 pm SEQ #: 4,089

LEGAL

CURRENT OWNER	PARCEL ID	LOCATION
ROSKILLY DAVYD & PAUL XAVIER TRS LITTLE BAY TRUST 11 LITTLE BAY LN BUZZARDS BAY, MA 02532	20.1-7-0	11 LITTLE BAY LN

TRANSFER HISTORY	DOS	T	SALE PRICE	BK-PG (Cert)
ROSKILLY DAVYD & PAUL XAV	05/20/2016	F	1	(209607)
ROSKILLY DAVYD &	05/20/2016	F	1	(209606)
ROSKILLY DAVYD	05/15/2014	QS	400,000	(203357)

CLASS	CLASS%	DESCRIPTION	BN ID	BN	CARD
1010	100	SINGLE FAMILY		1	1 of 1

PMT NO	PMT DT	TY	DESC	AMOUNT	INSP	BY	1st	%
CHAP 91	07/19/2019	4	DETACH.STRUC		04/04/2022		100	100
19052	01/28/2019	15	INSULATE/WEA	5,339			100	100
17205	03/27/2017	2	ADDITIONS	48,000	06/12/2018	TL	100	100
10622	10/18/2010	2	ADDITIONS	20,700	08/09/2013		100	100
940482	10/11/2994	3	ALT/RENO	30,000	07/07/1995	JC	100	100

LAND

CD	T	AC/SF/UN	Nbhd	Infl1	N Index	ADJ BASE	SAF	Topo	Lpi	VC	CREDIT AMT	ADJ VALUE
100	S	34,770	4 1.00	100 1.00	100 1.00	353,550	1.11	A 1.00	BVG 1.50			312,290

TOTAL	34,761 SF	ZONING	1	FRNT	176
Nbhd	BBAY	NOTE	no beach, avg. views;chapter 91 no dock allowed/viewing only .. 11/19; boardwalk not installed yet per Sam in Conservation Dept		
Infl1	AVG				
N_Index	AVG				

ASSESSED	CURRENT	PREVIOUS
LAND	312,300	276,400
BUILDING	441,800	395,800
DETACHED	1,100	1,500
OTHER	0	0
TOTAL	**755,200**	**673,700**

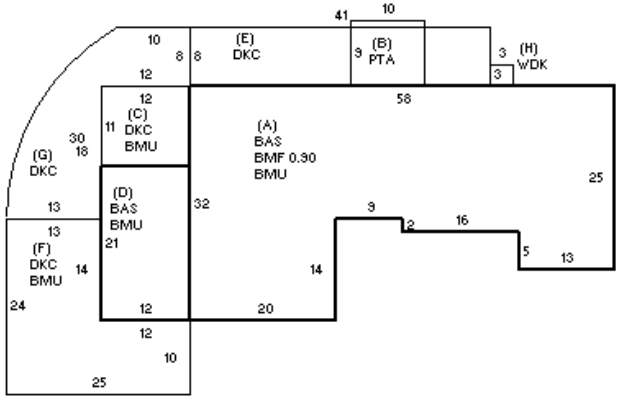

DETACHED

TY	QUAL	COND	DIM/NOTE	YB	UNITS	ADJ PRICE	RCNLD
SHF	A 1.00	50 0.50	8 X 16		128	16.42	1,100

PHOTO 03/23/2018

BLDG COMMENTS

BUILDING

BUILDING	CD	ADJ	DESC
MODEL	1		RESIDENTIAL
STYLE	1	0.95	RANCH [100%]
QUALITY	+	1.05	AVERAGE + [100%]
FRAME	1	1.00	WOOD FRAME [100%]

MEASURE	6/12/2018	TL
LIST	6/12/2018	EST
REVIEW	6/12/2018	TL

YEAR BLT	1965	SIZE ADJ	1.010
NET AREA	1,699	DETAIL ADJ	1.000
$NLA(RCN)	$325	OVERALL	1.000

CAPACITY	UNITS	ADJ
STORIES	1	1.00
ROOMS	8	1.00
BEDROOMS	3	1.00
BATHROOMS	3	1.00
FIXTURES	11	1.00
GARAGE CAPACITY	1	1.00
% BSMT FINISH	0.9	1.00
# OF HALF BATHS	0	1.00
# OF UNITS	1	1.00

ELEMENT	CD	DESCRIPTION	ADJ
FOUNDATION	4	FLR/WALL(FULL)	1.00
EXT COVER	2	CLAPBOARD	1.00
ROOF SHAPE	1	GABLE	1.00
ROOF COVER	1	ASPH/COMP SHIN	1.00
FLOOR COVER	1	HARDWOOD	1.02
INT. FINISH	2	DRYWALL	1.00
HEATING/COOLING	9	WARM-COOL AIR	1.03
FUEL SOURCE	2	GAS	1.00
USE	0		1.00

S	BAT	T	DESCRIPTION	UNITS	YB	ADJ PRICE	RCN
+	BMU	N	BSMT UNFINISHED	2,263		30.47	68,959
A	BMF	N	BSMT FINISH	1,302		32.25	41,986
A	BAS	L	BASE AREA	1,447	1965	191.48	277,073
B	PTA	N	PATIO	90		15.44	1,389
D	BAS	L	BASE AREA	252	2010	191.48	48,253
+	DKC	N	DECK-COMPOSITE	1,212		62.92	76,256
H	WDK	N	WOOD DECK	9		74.94	675
	BMG	O	BSMT GARAGE	2		7,559.25	15,119
	F12	O	FPL 1S 2OP	1		8,929.40	8,929
	FIX	O	XTRA FIXTURES	6		2,258.52	13,551

TOTAL RCN	552,190

CONDITION ELEM	CD
EXTERIOR	G
INTERIOR	A
KITCHEN	A
BATHS	A
HEAT	A
ELECT	A

EFF.YR/AGE	1999 / 23	
COND	20	20 %
FUNC	0	
ECON	0	
DEPR	20	% GD 80
RCNLD		$441,800