Key: 4837

Town of Bourne - Fiscal Year 2024

12/18/2023 6:02 pm SEQ #: 4,954

LEGAL

CURRENT OWNER	PARCEL ID	LOCATION
HASKELL KENNETH G ETUX TRACEY A HASKELL 25 OLD MONUMENT NECK RD BUZZARDS BAY, MA 02532	23.4-32-0	25 OLD MONUMENT NECK RD

TRANSFER HISTORY	DOS	T	SALE PRICE	BK-PG (Cert)
HASKELL KENNETH G ETUX	01/31/2007	QS	276,500	21741-159
STOCKLEY DAVID J	02/18/1986	XX		417+-194+

CLASS	CLASS%	DESCRIPTION	BN ID	BN	CARD
1010	100	SINGLE FAMILY		1	1 of 1

PMT NO	PMT DT	TY	DESC	AMOUNT	INSP	BY	1st	%
04438	06/14/2004	3	ALT/RENO	15,000	02/03/2005	TL	100	100
910240	05/29/1991	2	ADDITIONS	10,000	02/01/1992	HS	100	100

LAND

CD	T	AC/SF/UN	Nbhd	Infl1	N_Index	ADJ BASE	SAF	Topo	Lpi	VC	CREDIT AMT	ADJ VALUE
100	S	21,840	6 1.00	100 1.00	100 1.00	212,130	1.59	A 1.00	R04 0.90			169,110

TOTAL	21,824 SF	ZONING	1	FRNT	0
Nbhd	BOURNE	NOTE			
Infl1	AVG				
N_Index	AVG				

ASSESSED	CURRENT	PREVIOUS
LAND	169,100	166,300
BUILDING	214,000	189,400
DETACHED	0	0
OTHER	0	0
TOTAL	**383,100**	**355,700**

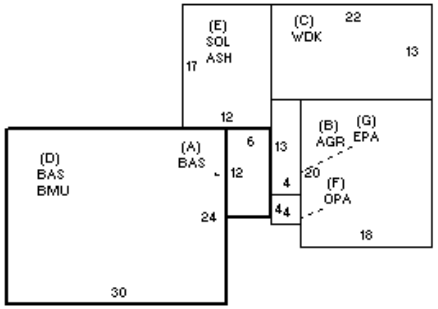

DETACHED

TY	QUAL	COND	DIM/NOTE	YB	UNITS	ADJ PRICE	RCNLD

PHOTO 12/31/2002

BLDG COMMENTS

BUILDING

BUILDING	CD	ADJ	DESC
MODEL	1		RESIDENTIAL
STYLE	1	0.95	RANCH [100%]
QUALITY	A	1.00	AVERAGE [100%]
FRAME	1	1.00	WOOD FRAME [100%]

MEASURE	10/29/2016	DB
LIST	10/29/2016	EST
REVIEW	10/29/2016	DB

YEAR BLT	1977	SIZE ADJ	1.020
NET AREA	792	DETAIL ADJ	1.000
$NLA(RCN)	$351	OVERALL	1.010

CAPACITY	UNITS	ADJ
STORIES	1	1.00
ROOMS	5	1.00
BEDROOMS	2	1.00
BATHROOMS	1	1.00
FIXTURES	5	1.00
GARAGE CAPACITY	1	1.00
% BSMT FINISH	0	1.00
# OF HALF BATHS	0	1.00
# OF UNITS	1	1.00

ELEMENT	CD	DESCRIPTION	ADJ
FOUNDATION	4	FLR/WALL(FULL)	1.00
EXT COVER	1	WOOD SHINGLE	1.02
ROOF SHAPE	1	GABLE	1.00
ROOF COVER	1	ASPH/COMP SHIN	1.00
FLOOR COVER	1	HARDWOOD	1.02
INT. FINISH	2	DRYWALL	1.00
HEATING/COOLING	2	HOT WATER	1.02
FUEL SOURCE	1	OIL	1.00
USE	0		1.00

S	BAT	T	DESCRIPTION	UNITS	YB	ADJ PRICE	RCN
+	BAS	L	BASE AREA	792	1977	212.50	168,302
B	AGR	N	ATT GARAGE	360		71.91	25,886
C	WDK	N	WOOD DECK	286		26.68	7,631
D	BMU	N	BSMT UNFINISHED	720		47.42	34,143
E	ASH	N	ATT SHED	204		22.15	4,520
E	SOL	N	SOLARIUM	204		88.84	18,124
F	OPA	N	OPEN PORCH	16		97.93	1,567
G	EPA	N	ENCLOSED PORCH	52		104.45	5,431
	F11	O	FPL 1S 1OP	1		8,260.10	8,260
	MST	O	MAS/METAL STACK	1		4,111.50	4,112

TOTAL RCN	277,975

CONDITION ELEM	CD
EXTERIOR	A
INTERIOR	A
KITCHEN	A
BATHS	A
HEAT	A
ELECT	A

EFF.YR/AGE	1996 / 26		
COND	23	23 %	
FUNC	0		
ECON	0		
DEPR	23	% GD	77
RCNLD			$214,000