Key: 4977

Town of Bourne - Fiscal Year 2024

12/18/2023 6:02 pm SEQ #: 5,105

LEGAL

CURRENT OWNER	PARCEL ID	LOCATION
SANTORO JOHN J SR & ALICE J TR SANTORO FAMILY TRUST 7 COASTAL WAY BOURNE, MA 02532	24.2-1-0	7 COASTAL WAY

TRANSFER HISTORY	DOS	T	SALE PRICE	BK-PG (Cert)
SANTORO JOHN J SR & ALICE	02/19/2021	F	1	33807-205
SANTORO JOHN J &	05/19/2000	QS	495,000	13018-86
DEASY PATRICK P	05/19/2000	X		13018-85

CLASS	CLASS%	DESCRIPTION	BN ID	BN	CARD
1010	100	SINGLE FAMILY		1	1 of 1

PMT NO	PMT DT	TY	DESC	AMOUNT	INSP	BY	1st	%
01509	08/16/2001	4	DETACH.STRUC	1,050	03/28/2002	TL	100	100

LAND

CD	T	AC/SF/UN	Nbhd	Infl1	N_Index	ADJ BASE	SAF	Topo	Lpi	VC	CREDIT AMT	ADJ VALUE
100	S	23,523	6 1.00	100 1.00	100 1.00	589,250	1.50	A 1.00	CEX 2.50			476,350

TOTAL	23,522 SF	ZONING		FRNT	0
Nbhd	BOURNE	NOTE			
Infl1	AVG				
N_Index	AVG				

ASSESSED	CURRENT	PREVIOUS
LAND	476,400	421,600
BUILDING	766,300	686,800
DETACHED	0	0
OTHER	0	0
TOTAL	**1,242,700**	**1,108,400**

DETACHED

TY	QUAL	COND	DIM/NOTE	YB	UNITS	ADJ PRICE	RCNLD
SHF	A 1.00	10 0.90	8 X 9			0.00	

PHOTO 09/21/2020

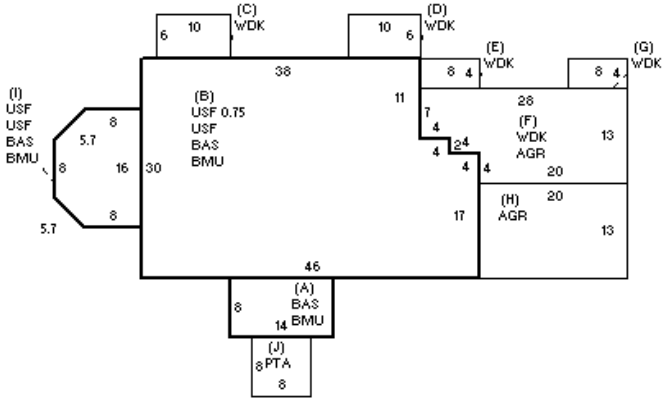

BUILDING

BUILDING	CD	ADJ	DESC
MODEL	1		RESIDENTIAL
STYLE	8	1.10	CONTEMPORARY [100%]
QUALITY	V	1.35	VERY GOOD [100%]
FRAME	1	1.00	WOOD FRAME [100%]

MEASURE	9/21/2020	TL
LIST	9/21/2020	EST
REVIEW		

BLDG COMMENTS

YEAR BLT	1988	SIZE ADJ	0.985
NET AREA	4,171	DETAIL ADJ	1.000
$NLA(RCN)	$236	OVERALL	1.120

CAPACITY	UNITS	ADJ
STORIES	3	1.00
ROOMS	13	1.00
BEDROOMS	5	1.00
BATHROOMS	3	1.00
FIXTURES	16	1.00
GARAGE CAPACITY	3	1.00
% BSMT FINISH	0	1.00
# OF HALF BATHS	1	1.00
# OF UNITS	1	1.00

ELEMENT	CD	DESCRIPTION	ADJ
FOUNDATION	4	FLR/WALL(FULL)	1.00
EXT COVER	10	VERT BOARD	1.00
ROOF SHAPE	1	GABLE	1.00
ROOF COVER	1	ASPH/COMP SHIN	1.00
FLOOR COVER	3	W/W CARPET	1.00
INT. FINISH	2	DRYWALL	1.00
HEATING/COOLING	2	HOT WATER	1.02
FUEL SOURCE	2	GAS	1.00
USE	0		1.00

S	BAT	T	DESCRIPTION	UNITS	YB	ADJ PRICE	RCN
+	BMU	N	BSMT UNFINISHED	1,572		47.58	74,794
+	BAS	L	BASE AREA	1,572	1988	273.22	429,505
+	USF	L	UPPER STORY FIN	2,599	1988	129.03	335,361
+	WDK	N	WOOD DECK	508		31.81	16,161
+	AGR	N	ATT GARAGE	584		92.05	53,756
J	PTA	N	PATIO	64		22.27	1,425
	F33	O	FPL 3S 3OP	1		15,524.70	15,525
	FIX	O	XTRA FIXTURES	10		3,171.66	31,717
	JAC	O	JACUZZI	1		18,288.80	18,289
	MST	O	MAS/METAL STACK	1		5,943.90	5,944

TOTAL RCN	982,475

CONDITION ELEM	CD
EXTERIOR	A
INTERIOR	A
KITCHEN	A
BATHS	A
HEAT	A
ELECT	A

EFF.YR/AGE	1997 / 25	
COND	22	22 %
FUNC	0	
ECON	0	
DEPR	22	% GD 78
RCNLD		$766,300