Key: 5161

Town of Bourne - Fiscal Year 2024

12/18/2023 6:02 pm SEQ #: 5,297

LEGAL

CURRENT OWNER	PARCEL ID	LOCATION
MCALPINE FRANCIS T & **DIANE P MCALPINE** **42 WATERHOUSE RD** **BOURNE, MA 02532-3858**	**24.3-86-0**	**42 WATERHOUSE RD**

TRANSFER HISTORY	DOS	T	SALE PRICE	BK-PG (Cert)
MCALPINE FRANCIS T &	09/08/1995	QS	142,000	9833-113

CLASS	CLASS%	DESCRIPTION	BN ID	BN	CARD
1010	**100**	**SINGLE FAMILY**		**1**	**1 of 1**

PMT NO	PMT DT	TY	DESC	AMOUNT	INSP	BY	1st	%
07483	08/12/2007	9	DECK	13,300	11/04/2009	TL	100	100
01762	12/06/2001	4	DETACH.STRUC	1,870	04/14/2003	TL	100	100
980037	01/26/1998	10	WOODSTOVE	737	01/21/1999	JS	100	100
930245	05/21/1993	3	ALT/RENO	500	04/01/1994	JS	100	100

LAND

CD	T	AC/SF/UN	Nbhd	Infl1	N_Index	ADJ BASE	SAF	Topo	Lpi	VC	CREDIT AMT	ADJ VALUE
100	S	18,000	6 1.00	100 1.00	100 1.00	212,130	1.87	A 1.00	R04 0.90			163,680

TOTAL	17,990 SF	ZONING	1	FRNT	0
Nbhd	BOURNE	NOTE			
Infl1	AVG				
N_Index	AVG				

ASSESSED	CURRENT	PREVIOUS
LAND	163,700	161,000
BUILDING	330,700	291,900
DETACHED	1,000	1,700
OTHER	0	0
TOTAL	**495,400**	**454,600**

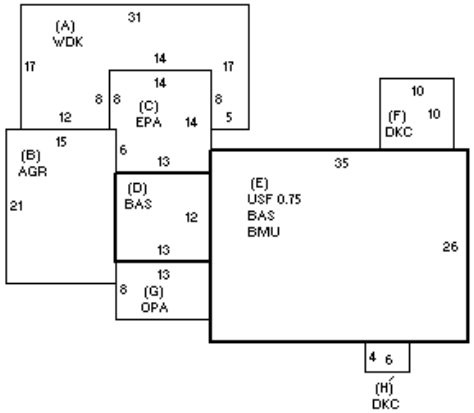

DETACHED

TY	QUAL	COND	DIM/NOTE	YB	UNITS	ADJ PRICE	RCNLD
SHF	A 1.00	50 0.50	8 X 10			0.00	
SHF	A 1.00	50 0.50	10 X 12		120	16.42	1,000

PHOTO 06/15/2023

BLDG COMMENTS

BUILDING

BUILDING	CD	ADJ	DESC
MODEL	1		RESIDENTIAL
STYLE	4	1.05	CAPE [100%]
QUALITY	A	1.00	AVERAGE [100%]
FRAME	1	1.00	WOOD FRAME [100%]

MEASURE	6/15/2023	SL
LIST	6/15/2023	EST
REVIEW	7/12/2023	TL

YEAR BLT	1956	SIZE ADJ	1.010
NET AREA	1,749	DETAIL ADJ	1.000
$NLA(RCN)	$249	OVERALL	1.110

CAPACITY	UNITS	ADJ
STORIES	1.75	1.00
ROOMS	6	1.00
BEDROOMS	4	1.00
BATHROOMS	2	1.00
FIXTURES	9	1.00
GARAGE CAPACITY	1	1.00
% BSMT FINISH	0	1.00
# OF HALF BATHS	0	1.00
# OF UNITS	1	1.00

ELEMENT	CD	DESCRIPTION	ADJ
FOUNDATION	4	FLR/WALL(FULL)	1.00
EXT COVER	1	WOOD SHINGLE	1.02
ROOF SHAPE	1	GABLE	1.00
ROOF COVER	1	ASPH/COMP SHIN	1.00
FLOOR COVER	1	HARDWOOD	1.02
INT. FINISH	2	DRYWALL	1.00
HEATING/COOLING	2	HOT WATER	1.02
FUEL SOURCE	1	OIL	1.00
USE	0		1.00

S	BAT	T	DESCRIPTION	UNITS	YB	ADJ PRICE	RCN
A	WDK	N	WOOD DECK	415		23.95	9,937
B	AGR	N	ATT GARAGE	315		78.25	24,649
C	EPA	N	ENCLOSED PORCH	190		82.73	15,719
+	BAS	L	BASE AREA	1,066	1956	215.21	229,417
E	BMU	N	BSMT UNFINISHED	910		40.88	37,202
E	USF	L	UPPER STORY FIN	683	1956	121.90	83,259
+	DKC	N	DECK-COMPOSITE	124		70.39	8,729
G	OPA	N	OPEN PORCH	104		76.93	8,000
	BSF	N	BSMT SEMI-FIN	420		20.61	8,657
	FIX	O	XTRA FIXTURES	4		2,387.38	9,550

TOTAL RCN	435,118

CONDITION ELEM	CD
EXTERIOR	A
INTERIOR	A
KITCHEN	A
BATHS	A
HEAT	A
ELECT	A

EFF.YR/AGE	1995 / 27		
COND	24	24 %	
FUNC	0		
ECON	0		
DEPR	24	% GD	76
RCNLD			$330,700