Key: 5171

Town of Bourne - Fiscal Year 2024

12/18/2023 6:02 pm SEQ #: 5,307

LEGAL

CURRENT OWNER	PARCEL ID	LOCATION
CZARNETZKI HAROLD L & C/O CAMERON JOHN W & 84 COTUIT RD BOURNE, MA 02532	24.4-4-0	84 COTUIT RD

TRANSFER HISTORY	DOS	T	SALE PRICE	BK-PG (Cert)
CAMERON JOHN W &	01/27/2023	QS	400,000	35614-245
CZARNETZKI HAROLD L &	10/29/1951	XX		796-20

CLASS	CLASS%	DESCRIPTION	BN ID	BN	CARD
1010	100	SINGLE FAMILY		1	1 of 1

PMT NO	PMT DT	TY	DESC	AMOUNT	INSP	BY	1st	%
EXB-23-272	05/17/2023	15	INSULATE/WEA	8,025			100	100

LAND

CD	T	AC/SF/UN	Nbhd	Infl1	N_Index	ADJ BASE	SAF	Topo	Lpi	VC	CREDIT AMT	ADJ VALUE
100	S	14,000	6 1.00	100 1.00	100 1.00	212,130	2.32	A 1.00	R04 0.90			158,040

TOTAL	13,983 SF	ZONING	1	FRNT	0
Nbhd	BOURNE	NOTE			
Infl1	AVG				
N_Index	AVG				

ASSESSED	CURRENT	PREVIOUS
LAND	158,000	155,400
BUILDING	274,900	263,500
DETACHED	0	0
OTHER	0	0
TOTAL	**432,900**	**418,900**

DETACHED

TY	QUAL	COND	DIM/NOTE	YB	UNITS	ADJ PRICE	RCNLD

PHOTO 06/23/2022

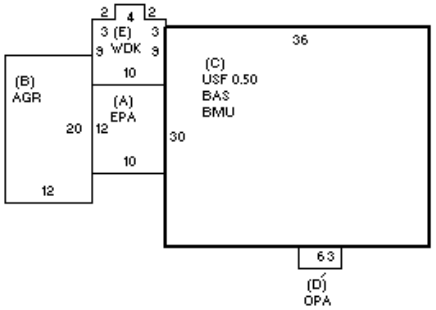

BLDG COMMENTS

BUILDING

BUILDING	CD	ADJ	DESC
MODEL	1		RESIDENTIAL
STYLE	4	1.05	CAPE [100%]
QUALITY	A	1.00	AVERAGE [100%]
FRAME	1	1.00	WOOD FRAME [100%]

MEASURE	6/23/2022	SL
LIST	6/23/2022	SL
REVIEW	5/15/2023	RP

YEAR BLT	1957	SIZE ADJ	1.010
NET AREA	1,620	DETAIL ADJ	1.000
$NLA(RCN)	$236	OVERALL	1.090

CAPACITY	UNITS	ADJ
STORIES	1.5	1.00
ROOMS	5	1.00
BEDROOMS	3	1.00
BATHROOMS	1	1.00
FIXTURES	5	1.00
GARAGE CAPACITY	1	1.00
% BSMT FINISH	0	1.00
# OF HALF BATHS	0	1.00
# OF UNITS	1	1.00

ELEMENT	CD	DESCRIPTION	ADJ
FOUNDATION	4	FLR/WALL(FULL)	1.00
EXT COVER	4	VINYL	1.00
ROOF SHAPE	1	GABLE	1.00
ROOF COVER	1	ASPH/COMP SHIN	1.00
FLOOR COVER	1	HARDWOOD	1.02
INT. FINISH	1	PLASTER	1.00
HEATING/COOLING	2	HOT WATER	1.02
FUEL SOURCE	2	GAS	1.00
USE	0		1.00

S	BAT	T	DESCRIPTION	UNITS	YB	ADJ PRICE	RCN
A	EPA	N	ENCLOSED PORCH	120		90.57	10,868
B	AGR	N	ATT GARAGE	240		76.84	18,441
C	BMU	N	BSMT UNFINISHED	1,080		40.14	43,356
C	BAS	L	BASE AREA	1,080	1957	211.34	228,242
C	USF	L	UPPER STORY FIN	540	1957	121.14	65,413
D	OPA	N	OPEN PORCH	18		104.64	1,884
E	WDK	N	WOOD DECK	98		48.44	4,747
	F11	O	FPL 1S 1OP	1		8,827.00	8,827

TOTAL RCN	381,778

CONDITION ELEM	CD
EXTERIOR	A
INTERIOR	F
KITCHEN	F
BATHS	A
HEAT	A
ELECT	A

EFF.YR/AGE	1991 / 31	
COND	28	28 %
FUNC	0	
ECON	0	
DEPR	28	% GD 72
RCNLD		$274,900