Key: 533

Town of Bourne - Fiscal Year 2024

12/18/2023 6:02 pm SEQ #: 531

LEGAL

CURRENT OWNER	PARCEL ID	LOCATION
FLYNN PETER Y 310 PUTNAM AVE CAMBRIDGE, MA 02139	4.1-136-0	56 SAMOSET RD

TRANSFER HISTORY	DOS	T	SALE PRICE	BK-PG (Cert)
FLYNN PETER Y	01/26/2017	U	445,000	30259-284
ROFFE JEAN S	06/30/1999	X		12378-236
ROFFE JEAN S &		XX		04730-00265

CLASS	CLASS%	DESCRIPTION	BN ID	BN	CARD
1010	100	SINGLE FAMILY		1	1 of 1

PMT NO	PMT DT	TY	DESC	AMOUNT	INSP	BY	1st	%
960103	04/01/1996	3	ALT/RENO	21,000	12/23/1996	JC	100	100

LAND

CD	T	AC/SF/UN	Nbhd	Infl1	N_Index	ADJ BASE	SAF	Topo	Lpi	VC	CREDIT AMT	ADJ VALUE
100	S	16,840	1 1.00	100 1.00	100 1.00	848,520	1.98	A 1.00	BVG 3.60			648,190

TOTAL	16,858 SF	ZONING	1	FRNT	334
Nbhd	N SAG	NOTE	Also frontage on Sagamore Rd		
Infl1	AVG				
N_Index	AVG				

ASSESSED	CURRENT	PREVIOUS
LAND	648,200	573,700
BUILDING	284,100	251,400
DETACHED	0	0
OTHER	0	0
TOTAL	**932,300**	**825,100**

DETACHED

TY	QUAL	COND	DIM/NOTE	YB	UNITS	ADJ PRICE	RCNLD

PHOTO 07/10/2008

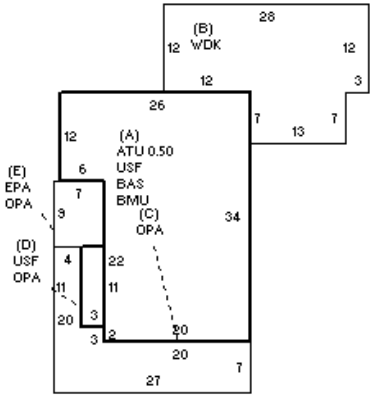

BUILDING

BUILDING	CD	ADJ	DESC
MODEL	1		RESIDENTIAL
STYLE	7	1.00	CONVENTIONAL [100%]
QUALITY	A	1.00	AVERAGE [100%]
FRAME	1	1.00	WOOD FRAME [100%]

MEASURE	1/10/2022	NMP
LIST	12/11/2017	EST
REVIEW	11/1/2018	DB

BLDG COMMENTS

YEAR BLT	1910	SIZE ADJ	1.010
NET AREA	1,537	DETAIL ADJ	1.000
$NLA(RCN)	$231	OVERALL	1.020

CAPACITY	UNITS	ADJ
STORIES	2	1.00
ROOMS	6	1.00
BEDROOMS	3	1.00
BATHROOMS	1	1.00
FIXTURES	6	1.00
GARAGE CAPACITY	1	1.00
% BSMT FINISH	0	1.00
# OF HALF BATHS	0	1.00
# OF UNITS	1	1.00

ELEMENT	CD	DESCRIPTION	ADJ
FOUNDATION	3	FOUN. WALL	1.00
EXT COVER	4	VINYL	1.00
ROOF SHAPE	1	GABLE	1.00
ROOF COVER	1	ASPH/COMP SHIN	1.00
FLOOR COVER	2	SOFTWOOD	1.02
INT. FINISH	2	DRYWALL	1.00
HEATING/COOLING	1	FORCED AIR	1.00
FUEL SOURCE	1	OIL	1.00
USE	0		1.00

S	BAT	T	DESCRIPTION	UNITS	YB	ADJ PRICE	RCN
A	BMU	N	BSMT UNFINISHED	752		47.42	35,660
A	BAS	L	BASE AREA	752	1910	212.50	159,802
+	USF	L	UPPER STORY FIN	785	1910	112.02	87,934
A	ATU	N	ATTIC UNF	376		43.54	16,372
B	WDK	N	WOOD DECK	427		22.01	9,397
+	OPA	N	OPEN PORCH	343		60.63	20,796
E	EPA	N	ENCLOSED PORCH	63		104.44	6,580
	BMG	O	BSMT GARAGE	1		7,343.30	7,343
	F21	O	FPL 2S 1OP	1		9,075.00	9,075
	FIX	O	XTRA FIXTURES	1		2,194.30	2,194

TOTAL RCN	355,152

CONDITION ELEM	CD
EXTERIOR	A
INTERIOR	A
KITCHEN	A
BATHS	A
HEAT	U
ELECT	A

EFF.YR/AGE	1999 / 23		
COND	20	20 %	
FUNC	0		
ECON	0		
DEPR	20	% GD	80
RCNLD			$284,100