Key: 5350

Town of Bourne - Fiscal Year 2024

12/18/2023 6:02 pm SEQ #: 5,493

LEGAL

CURRENT OWNER	PARCEL ID	LOCATION
GALLAGHER JOHN J & PATRICIA A GALLAGHER 96 PRESIDENTS RD BOURNE, MA 02532	26.1-125-0	96 PRESIDENTS RD

TRANSFER HISTORY	DOS	T	SALE PRICE	BK-PG (Cert)
GALLAGHER JOHN J & LASPADA JOSEPH G	08/03/2011	QS XX	341,900	(194881) 00470-9

CLASS	CLASS%	DESCRIPTION	BN ID	BN	CARD
1010	100	SINGLE FAMILY		1	1 of 1

PMT NO	PMT DT	TY	DESC	AMOUNT	INSP	BY	1st	%
		3	ALT/RENO		02/06/2023	SL	100	100
B-22-6	03/01/2022	2	ADDITIONS	193,000	02/06/2023	SL	100	100
17373	05/22/2017	3	ALT/RENO	1,400			100	100
11456	08/08/2011	3	ALT/RENO	20,800			100	100
2219	09/20/1988	2	ADDITIONS	30,000	03/09/1990	DD	100	100

LAND

CD	T	AC/SF/UN	Nbhd	Infl1	N_Index	ADJ BASE	SAF	Topo	Lpi	VC	CREDIT AMT	ADJ VALUE
100	S	21,600	7 1.00	100 1.00	100 1.00	424,260	1.60	A 1.00	BGD 1.80			337,530

TOTAL	21,606 SF	ZONING	1	FRNT	0
Nbhd	GRAY GAB	NOTE			
Infl1	AVG				
N_Index	AVG				

ASSESSED	CURRENT	PREVIOUS
LAND	337,500	298,700
BUILDING	489,800	292,300
DETACHED	0	0
OTHER	0	0
TOTAL	**827,300**	**591,000**

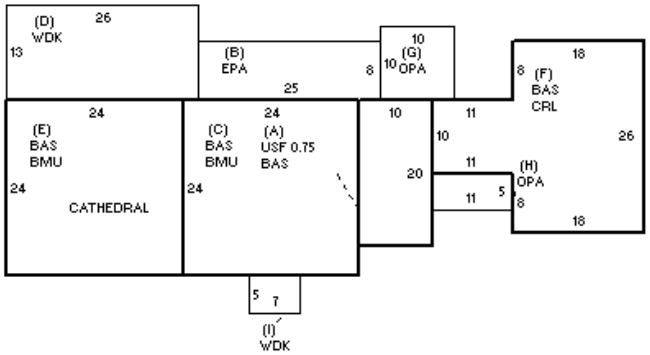

DETACHED

TY	QUAL	COND	DIM/NOTE	YB	UNITS	ADJ PRICE	RCNLD

PHOTO 02/06/2023

BLDG COMMENTS

BUILDING

BUILDING	CD	ADJ	DESC
MODEL	1		RESIDENTIAL
STYLE	4	1.05	CAPE [100%]
QUALITY	A	1.00	AVERAGE [100%]
FRAME	1	1.00	WOOD FRAME [100%]

MEASURE	2/6/2023	SL
LIST	2/6/2023	EST
REVIEW	7/24/2023	RP

YEAR BLT	1920	SIZE ADJ	1.005
NET AREA	2,332	DETAIL ADJ	1.000
$NLA(RCN)	$244	OVERALL	1.140

CAPACITY	UNITS	ADJ
STORIES	1.75	1.00
ROOMS	8	1.00
BEDROOMS	3	1.00
BATHROOMS	2	1.00
FIXTURES	9	1.00
GARAGE CAPACITY	0	1.00
% BSMT FINISH	0	1.00
# OF HALF BATHS	0	1.00
# OF UNITS	1	1.00

ELEMENT	CD	DESCRIPTION	ADJ
FOUNDATION	3	FOUN. WALL	1.00
EXT COVER	1	WOOD SHINGLE	1.02
ROOF SHAPE	1	GABLE	1.00
ROOF COVER	1	ASPH/COMP SHIN	1.00
FLOOR COVER	1	HARDWOOD	1.02
INT. FINISH	2	DRYWALL	1.00
HEATING/COOLING	11	HT WATER CL AIR	1.05
FUEL SOURCE	2	GAS	1.00
USE	0		1.00

S	BAT	T	DESCRIPTION	UNITS	YB	ADJ PRICE	RCN
+	BAS	L	BASE AREA	1,352	1920	202.92	274,351
A	USF	L	UPPER STORY FIN	150	1920	126.07	18,910
B	EPA	N	ENCLOSED PORCH	200		84.55	16,909
+	BMU	N	BSMT UNFINISHED	1,152		41.78	48,129
+	WDK	N	WOOD DECK	373		24.47	9,128
F	CRL	N	BSMT CRAWL	578		29.43	17,011
F	BAS	L	BASE AREA	578	2022	202.92	117,289
+	OPA	N	OPEN PORCH	155		74.88	11,607
	USF	L	UPPER STORY FIN	252	1920	126.06	31,768
	F21	O	FPL 2S 1OP	1		10,092.50	10,093
	FIX	O	XTRA FIXTURES	4		2,439.78	9,759
	MST	O	MAS/METAL STACK	1		4,572.50	4,573

TOTAL RCN	569,525

CONDITION ELEM	CD
EXTERIOR	G
INTERIOR	G
KITCHEN	A
BATHS	A
HEAT	A
ELECT	A

EFF.YR/AGE	2005 / 17	
COND	14	14 %
FUNC	0	
ECON	0	
DEPR	14	% GD 86
RCNLD		$489,800