Key: 537

Town of Bourne - Fiscal Year 2024

12/18/2023 6:02 pm SEQ #: 535

LEGAL

CURRENT OWNER	PARCEL ID	LOCATION
NIXON SARAH ALLEN ETUX BRIAN T NIXON PO BOX 425 SAGAMORE BEACH, MA 02562	4.1-140-0	15 HAWES RD

TRANSFER HISTORY	DOS	T	SALE PRICE	BK-PG (Cert)
NIXON SARAH ALLEN ETUX	03/09/2017	F	1	30341-112
FAGERBURG RACHEL A		XX		02304-0026

CLASS	CLASS%	DESCRIPTION	BN ID	BN	CARD
1010	100	SINGLE FAMILY		1	1 of 1

PMT NO	PMT DT	TY	DESC	AMOUNT	INSP	BY	1st	%
B-21-430	09/22/2022	2	ADDITIONS	810,280	06/28/2023	SL	55	64
		12	CYCLICAL		12/08/2017	BC	100	100
13378	06/12/2013	3	ALT/RENO	4,000	02/18/2015		100	100
09244	06/10/2009	9	DECK	3,800	02/18/2015		100	100
08450	08/22/2008	3	ALT/RENO	5,200	06/15/2009		100	100

LAND

CD	T	AC/SF/UN	Nbhd	Infl1	N_Index	ADJ BASE	SAF	Topo	Lpi	VC	CREDIT AMT	ADJ VALUE
100	S	9,340	1 1.00	100 1.00	100 1.00	848,520	3.33	A 1.00	BVG 3.60			605,810

TOTAL	9,322 SF	ZONING	1	FRNT	66
Nbhd	N SAG	NOTE	Also frontage on Sagamore Rd		
Infl1	AVG				
N_Index	AVG				

ASSESSED	CURRENT	PREVIOUS
LAND	605,800	536,200
BUILDING	459,600	339,900
DETACHED	0	0
OTHER	0	0
TOTAL	**1,065,400**	**876,100**

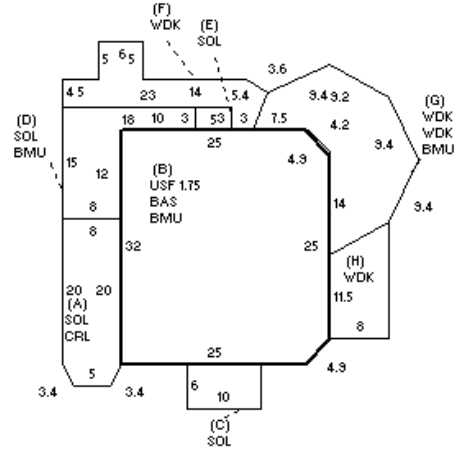

DETACHED

TY	QUAL	COND	DIM/NOTE	YB	UNITS	ADJ PRICE	RCNLD

PHOTO 05/19/2023

BLDG COMMENTS

BUILDING

BUILDING	CD	ADJ	DESC
MODEL	1		RESIDENTIAL
STYLE	7	1.00	CONVENTIONAL [100%]
QUALITY	+	1.05	AVERAGE + [100%]
FRAME	1	1.00	WOOD FRAME [100%]

MEASURE	5/19/2023	SL
LIST	5/19/2023	EST
REVIEW	7/6/2023	SL

YEAR BLT	1911	SIZE ADJ	1.005
NET AREA	2,475	DETAIL ADJ	1.000
$NLA(RCN)	$216	OVERALL	1.060

CAPACITY	UNITS	ADJ
STORIES	2.75	1.00
ROOMS	10	1.00
BEDROOMS	7	1.00
BATHROOMS	3	1.00
FIXTURES	14	1.00
GARAGE CAPACITY	0	1.00
% BSMT FINISH	0	1.00
# OF HALF BATHS	1	1.00
# OF UNITS	1	1.00

ELEMENT	CD	DESCRIPTION	ADJ
FOUNDATION	4	FLR/WALL(FULL)	1.00
EXT COVER	1	WOOD SHINGLE	1.02
ROOF SHAPE	3	GAMBREL	1.00
ROOF COVER	2	WOOD SHINGLES	1.02
FLOOR COVER	1	HARDWOOD	1.02
INT. FINISH	1	PLASTER	1.00
HEATING/COOLING	1	FORCED AIR	1.00
FUEL SOURCE	2	GAS	1.00
USE	0		1.00

S	BAT	T	DESCRIPTION	UNITS	YB	ADJ PRICE	RCN
A	CRL	N	BSMT CRAWL	180		38.32	6,897
A	SOL	N	SOLARIUM	180		107.21	19,298
+	BMU	N	BSMT UNFINISHED	1,325		35.73	47,348
B	BAS	L	BASE AREA	900	1911	221.82	199,635
B	USF	L	UPPER STORY FIN	1,575	1911	116.30	183,165
C	SOL	N	SOLARIUM	60		122.56	7,353
D	SOL	N	SOLARIUM	150		114.88	17,233
E	SOL	N	SOLARIUM	15		130.20	1,953
+	WDK	N	WOOD DECK	809		23.89	19,329
	F32	O	FPL 3S 2OP	1		10,762.80	10,763
	FIX	O	XTRA FIXTURES	9		2,382.04	21,438

TOTAL RCN	534,411
CONDITION ELEM	CD
EXTERIOR	G
INTERIOR	A
KITCHEN	A
BATHS	A
HEAT	U
ELECT	U

EFF.YR/AGE	2005 / 17	
COND	14	14 %
FUNC	0	uc
ECON	0	
DEPR	14	% GD 86
RCNLD		$459,600