Key: 5373

Town of Bourne - Fiscal Year 2024

12/18/2023 6:02 pm SEQ #: 5,517

LEGAL

CURRENT OWNER	PARCEL ID	LOCATION
BANKS BRIAN S ETUX LEANNE V BANKS 1 GILDER RD BOURNE, MA 02532	26.1-156-0	1 GILDER RD

TRANSFER HISTORY	DOS	T	SALE PRICE	BK-PG (Cert)
BANKS BRIAN S ETUX	09/09/2011	QS	440,000	25669-221
HATCH ARTHUR A &	08/17/1987	XX		5907-34

CLASS	CLASS%	DESCRIPTION	BN ID	BN	CARD
1010	100	SINGLE FAMILY		1	1 of 1

PMT NO	PMT DT	TY	DESC	AMOUNT	INSP	BY	1st	%
EXB-21-602	08/27/2021	15	INSULATE/WEA	1,600			100	100
06467	07/31/2006	3	ALT/RENO		07/12/2007	TL	100	100
06202	04/06/2006	3	ALT/RENO	1,500	07/12/2007	TL	100	100

LAND

CD	T	AC/SF/UN	Nbhd	Infl1	N_Index	ADJ BASE	SAF	Topo	Lpi	VC	CREDIT AMT	ADJ VALUE
100	S	15,497	7 1.00	100 1.00	100 1.00	518,540	2.12	A 1.00	BVG 2.20			391,480

TOTAL	15,507 SF	ZONING	1	FRNT	0

Nbhd	GRAY GAB
Infl1	AVG
N_Index	AVG

NOTE

ASSESSED	CURRENT	PREVIOUS
LAND	391,500	346,500
BUILDING	305,200	270,100
DETACHED	0	0
OTHER	0	0
TOTAL	**696,700**	**616,600**

DETACHED

TY	QUAL	COND	DIM/NOTE	YB	UNITS	ADJ PRICE	RCNLD

PHOTO 11/29/2011

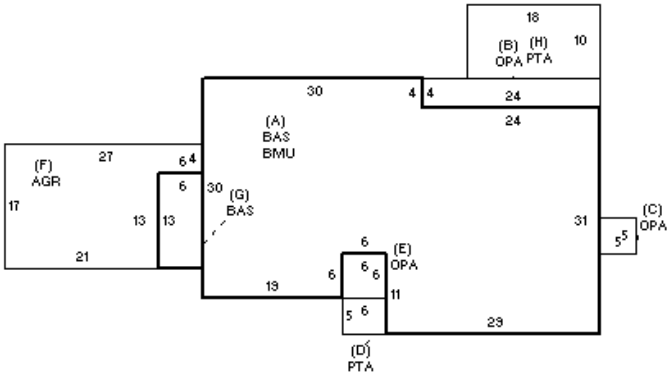

BLDG COMMENTS

BUILDING

BUILDING	CD	ADJ	DESC
MODEL	1		RESIDENTIAL
STYLE	1	0.95	RANCH [100%]
QUALITY	A	1.00	AVERAGE [100%]
FRAME	1	1.00	WOOD FRAME [100%]

MEASURE	9/7/2014	TL
LIST	9/7/2014	EST
REVIEW	10/28/2016	DB

YEAR BLT	1955	SIZE ADJ	1.010
NET AREA	1,711	DETAIL ADJ	1.000
$NLA(RCN)	$235	OVERALL	0.970

CAPACITY	UNITS	ADJ
STORIES	1	1.00
ROOMS	5	1.00
BEDROOMS	3	1.00
BATHROOMS	2	1.00
FIXTURES	10	1.00
GARAGE CAPACITY	1	1.00
% BSMT FINISH	0	1.00
# OF HALF BATHS	0	1.00
# OF UNITS	1	1.00

ELEMENT	CD	DESCRIPTION	ADJ
FOUNDATION	4	FLR/WALL(FULL)	1.00
EXT COVER	1	WOOD SHINGLE	1.02
ROOF SHAPE	1	GABLE	1.00
ROOF COVER	1	ASPH/COMP SHIN	1.00
FLOOR COVER	13	HARDWOOD-W/W	1.00
INT. FINISH	2	DRYWALL	1.00
HEATING/COOLING	1	FORCED AIR	1.00
FUEL SOURCE	2	GAS	1.00
USE	0		1.00

S	BAT	T	DESCRIPTION	UNITS	YB	ADJ PRICE	RCN
A	BMU	N	BSMT UNFINISHED	1,633		29.05	47,439
+	OPA	N	OPEN PORCH	157		64.03	10,053
+	PTA	N	PATIO	210		13.32	2,797
F	AGR	N	ATT GARAGE	381		68.38	26,053
+	BAS	L	BASE AREA	1,711	1955	173.52	296,893
	F11	O	FPL 1S 1OP	1		7,855.20	7,855
	FIX	O	XTRA FIXTURES	5		2,086.36	10,432

TOTAL RCN	401,522

CONDITION ELEM	CD
EXTERIOR	A
INTERIOR	A
KITCHEN	A
BATHS	A
HEAT	A
ELECT	A

EFF.YR/AGE	1995 / 27	
COND	24	24 %
FUNC	0	
ECON	0	
DEPR	24	% GD 76
RCNLD		$305,200