Key: 5443

Town of Bourne - Fiscal Year 2024

12/18/2023 6:02 pm SEQ #: 5,587

LEGAL

CURRENT OWNER	PARCEL ID	LOCATION
LOWE MARGARET A 25 PRESIDENTS RD BOURNE, MA 02532	26.2-23-0	25 PRESIDENTS RD

TRANSFER HISTORY	DOS	T	SALE PRICE	BK-PG (Cert)
LOWE MARGARET A	06/18/2021	QS	402,000	34222-4
CRANE DAVID W &CHRISTINE	11/26/2010	F	100	25035-205
CRANE DAVID W &	02/28/2000	QS	138,000	12852-238

CLASS	CLASS%	DESCRIPTION	BN ID	BN	CARD
1010	100	SINGLE FAMILY		1	1 of 1

PMT NO	PMT DT	TY	DESC	AMOUNT	INSP	BY	1st	%
16096	02/11/2016	15	INSULATE/WEA	3,262			100	100

LAND

CD	T	AC/SF/UN	Nbhd	Infl1	N_Index	ADJ BASE	SAF	Topo	Lpi	VC	CREDIT AMT	ADJ VALUE
100	S	11,464	7 1.00	100 1.00	100 1.00	318,195	2.77	A 1.00	BAV 1.35			231,680

TOTAL	11,456 SF	ZONING	1	FRNT	0
Nbhd	GRAY GAB	NOTE			
Infl1	AVG				
N_Index	AVG				

ASSESSED	CURRENT	PREVIOUS
LAND	231,700	205,000
BUILDING	174,900	154,800
DETACHED	0	0
OTHER	0	0
TOTAL	**406,600**	**359,800**

DETACHED

TY	QUAL	COND	DIM/NOTE	YB	UNITS	ADJ PRICE	RCNLD

PHOTO 06/16/2022

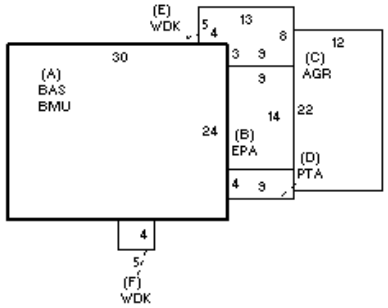

BLDG COMMENTS

BUILDING

BUILDING	CD	ADJ	DESC
MODEL	1		RESIDENTIAL
STYLE	1	0.95	RANCH [100%]
QUALITY	A	1.00	AVERAGE [100%]
FRAME	1	1.00	WOOD FRAME [100%]

MEASURE	3/1/2019	RP
LIST	3/1/2019	RP
REVIEW	6/16/2022	RP

YEAR BLT	1948	SIZE ADJ	1.020
NET AREA	720	DETAIL ADJ	1.000
$NLA(RCN)	$320	OVERALL	1.010

CAPACITY	UNITS	ADJ
STORIES	1	1.00
ROOMS	4	1.00
BEDROOMS	2	1.00
BATHROOMS	1	1.00
FIXTURES	5	1.00
GARAGE CAPACITY	1	1.00
% BSMT FINISH	0	1.00
# OF HALF BATHS	0	1.00
# OF UNITS	1	1.00

ELEMENT	CD	DESCRIPTION	ADJ
FOUNDATION	4	FLR/WALL(FULL)	1.00
EXT COVER	1	WOOD SHINGLE	1.02
ROOF SHAPE	1	GABLE	1.00
ROOF COVER	1	ASPH/COMP SHIN	1.00
FLOOR COVER	1	HARDWOOD	1.02
INT. FINISH	2	DRYWALL	1.00
HEATING/COOLING	2	HOT WATER	1.02
FUEL SOURCE	2	GAS	1.00
USE	0		1.00

S	BAT	T	DESCRIPTION	UNITS	YB	ADJ PRICE	RCN
A	BMU	N	BSMT UNFINISHED	720		47.42	34,143
A	BAS	L	BASE AREA	720	1948	212.50	153,001
B	EPA	N	ENCLOSED PORCH	126		84.75	10,679
C	AGR	N	ATT GARAGE	264		71.90	18,983
D	PTA	N	PATIO	36		15.83	570
+	WDK	N	WOOD DECK	112		40.71	4,560
	F11	O	FPL 1S 1OP	1		8,260.10	8,260

TOTAL RCN	230,195

CONDITION ELEM	CD
EXTERIOR	A
INTERIOR	A
KITCHEN	A
BATHS	A
HEAT	A
ELECT	A

EFF.YR/AGE	1995 / 27		
COND	24	24 %	
FUNC	0		
ECON	0		
DEPR	24	% GD	76
RCNLD			$174,900