Key: 5448

Town of Bourne - Fiscal Year 2024

12/18/2023 6:02 pm SEQ #: 5,592

LEGAL

CURRENT OWNER	PARCEL ID	LOCATION
HARRINGTON DONALD J - TR 66 ONLEY RD REALTY TRUST 66 ONLEY RD BOURNE, MA 02532	26.2-28-0	66 OLNEY RD

TRANSFER HISTORY	DOS	T	SALE PRICE	BK-PG (Cert)
HARRINGTON DONALD J - TR	08/23/2017	F	10	30716-222
HARRINGTON DONALD	05/17/2005	N		19831-37+
HARRINGTON DOROTHY	11/22/1991	G	70,000	8863-033

CLASS	CLASS%	DESCRIPTION	BN ID	BN	CARD
1010	100	SINGLE FAMILY		1	1 of 1

PMT NO	PMT DT	TY	DESC	AMOUNT	INSP	BY	1st	%
05667	09/27/2005	2	ADDITIONS	160,000	06/12/2008	TL	100	100
01198	04/24/2001	3	ALT/RENO	10,000	01/02/2002	TL	100	100
990712	11/18/1999	3	ALT/RENO	5,908	08/27/2000	TL	100	100

LAND

CD	T	AC/SF/UN	Nbhd	Infl1	N_Index	ADJ BASE	SAF	Topo	Lpi	VC	CREDIT AMT	ADJ VALUE
100	S	10,380	7 1.00	100 1.00	100 1.00	424,260	3.03	A 1.00	BGD 1.80			305,840

TOTAL	10,454 SF	ZONING	1	FRNT	0

Nbhd	GRAY GAB
Infl1	AVG
N_Index	AVG

NOTE: MAILING ADD CHG PER OWNER 7/8/2013

ASSESSED	CURRENT	PREVIOUS
LAND	305,800	270,700
BUILDING	490,700	434,300
DETACHED	0	0
OTHER	0	0
TOTAL	**796,500**	**705,000**

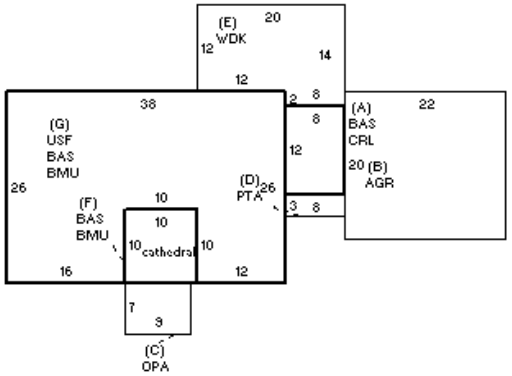

DETACHED

TY	QUAL	COND	DIM/NOTE	YB	UNITS	ADJ PRICE	RCNLD

PHOTO 12/31/2002

BLDG COMMENTS

BUILDING

BUILDING	CD	ADJ	DESC
MODEL	1		RESIDENTIAL
STYLE	5	1.00	COLONIAL [100%]
QUALITY	G	1.10	GOOD [100%]
FRAME	1	1.00	WOOD FRAME [100%]

MEASURE	6/12/2008	TL
LIST	6/30/2008	TL
REVIEW	6/30/2008	TL

YEAR BLT	1962	SIZE ADJ	1.010
NET AREA	1,972	DETAIL ADJ	1.000
$NLA(RCN)	$257	OVERALL	1.090

CAPACITY	UNITS	ADJ
STORIES	2	1.00
ROOMS	5	1.00
BEDROOMS	4	1.00
BATHROOMS	3	1.00
FIXTURES	13	1.00
GARAGE CAPACITY	2	1.00
% BSMT FINISH	0	1.00
# OF HALF BATHS	0	1.00
# OF UNITS	1	1.00

ELEMENT	CD	DESCRIPTION	ADJ
FOUNDATION	4	FLR/WALL(FULL)	1.00
EXT COVER	1	WOOD SHINGLE	1.02
ROOF SHAPE	1	GABLE	1.00
ROOF COVER	1	ASPH/COMP SHIN	1.00
FLOOR COVER	1	HARDWOOD	1.02
INT. FINISH	2	DRYWALL	1.00
HEATING/COOLING	11	HT WATER CL AIR	1.05
FUEL SOURCE	2	GAS	1.00
USE	0		1.00

S	BAT	T	DESCRIPTION	UNITS	YB	ADJ PRICE	RCN
A	CRL	N	BSMT CRAWL	96		41.49	3,983
A	BAS	L	BASE AREA	96	2005	232.47	22,317
B	AGR	N	ATT GARAGE	440		74.84	32,932
C	OPA	N	OPEN PORCH	63		92.80	5,847
D	PTA	N	PATIO	24		20.44	491
E	WDK	N	WOOD DECK	256		31.36	8,029
+	BMU	N	BSMT UNFINISHED	988		44.16	43,628
+	BAS	L	BASE AREA	988	1962	232.47	229,679
G	USF	L	UPPER STORY FIN	888	1962	130.36	115,762
	FIX	O	XTRA FIXTURES	8		2,578.95	20,632
	GFP	O	GAS FIREPLACE	1		7,750.30	7,750
	JAC	O	JACUZZI	1		14,871.00	14,871

TOTAL RCN	505,920

CONDITION ELEM	CD
EXTERIOR	V
INTERIOR	G
KITCHEN	G
BATHS	G
HEAT	U
ELECT	U

EFF.YR/AGE	2016 / 6		
COND	3 3 %		
FUNC	0		
ECON	0		
DEPR	3	% GD	97
RCNLD	$490,700		