Key: 5585

Town of Bourne - Fiscal Year 2024

12/18/2023 6:02 pm SEQ #: 5,726

LEGAL

CURRENT OWNER	PARCEL ID	LOCATION
BEAUREGARD RONALD & MARILYN BEAUREGARD 15 WARREN RD BOURNE, MA 02532	26.3-33-0	15 WARREN RD

TRANSFER HISTORY	DOS	T	SALE PRICE	BK-PG (Cert)
BEAUREGARD RONALD &	11/14/2005	QS	632,000	20469-30
MELVILLE JEAN C	11/03/2003	QS	585,000	17878-338
PETERSON RICHARD W ETUX	12/02/2002	F	100	16010-257

CLASS	CLASS%	DESCRIPTION	BN ID	BN	CARD
1010	100	SINGLE FAMILY		1	1 of 1

PMT NO	PMT DT	TY	DESC	AMOUNT	INSP	BY	1st	%
04317	05/17/2004	9	DECK	3,500	06/24/2008	TL	100	100
990438	07/19/1999	4	DETACH.STRUC	1,200	12/03/1999	MS	100	100

LAND

CD	T	AC/SF/UN	Nbhd	Infl1	N_Index	ADJ BASE	SAF	Topo	Lpi	VC	CREDIT AMT	ADJ VALUE
100	S	11,200	7 1.00	100 1.00	100 1.00	424,260	2.83	A 1.00	BGD 1.80			308,160

TOTAL	11,195 SF	ZONING	1	FRNT	0
Nbhd	GRAY GAB	NOTE	deeded private beach rights		
Infl1	AVG				
N_Index	AVG				

ASSESSED	CURRENT	PREVIOUS
LAND	308,200	272,700
BUILDING	570,400	504,700
DETACHED	0	0
OTHER	0	0
TOTAL	**878,600**	**777,400**

DETACHED

TY	QUAL	COND	DIM/NOTE	YB	UNITS	ADJ PRICE	RCNLD
SHF	A 1.00	A 0.75	8 X 9			0.00	

PHOTO 02/09/2022

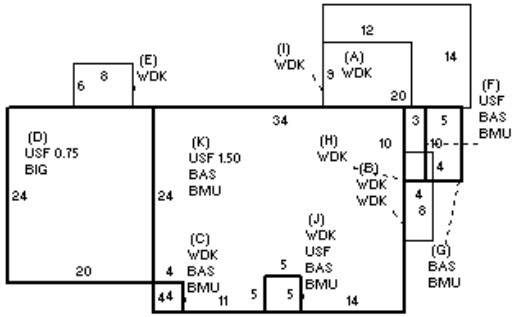

BUILDING

BUILDING	CD	ADJ	DESC
MODEL	1		RESIDENTIAL
STYLE	8	1.10	CONTEMPORARY [100%]
QUALITY	+	1.05	AVERAGE + [100%]
FRAME	1	1.00	WOOD FRAME [100%]

MEASURE	2/4/2022	RP
LIST	2/4/2022	EST
REVIEW	2/4/2022	RP

BLDG COMMENTS

YEAR BLT	1986	SIZE ADJ	1.000
NET AREA	2,814	DETAIL ADJ	1.000
$NLA(RCN)	$216	OVERALL	1.140

CAPACITY	UNITS	ADJ
STORIES	2.5	1.00
ROOMS	7	1.00
BEDROOMS	3	1.00
BATHROOMS	3	1.00
FIXTURES	12	1.00
GARAGE CAPACITY	2	1.00
% BSMT FINISH	0	1.00
# OF HALF BATHS	0	1.00
# OF UNITS	1	1.00

ELEMENT	CD	DESCRIPTION	ADJ
FOUNDATION	4	FLR/WALL(FULL)	1.00
EXT COVER	2	CLAPBOARD	1.00
ROOF SHAPE	1	GABLE	1.00
ROOF COVER	1	ASPH/COMP SHIN	1.00
FLOOR COVER	1	HARDWOOD	1.02
INT. FINISH	2	DRYWALL	1.00
HEATING/COOLING	2	HOT WATER	1.02
FUEL SOURCE	2	GAS	1.00
USE	0		1.00

S	BAT	T	DESCRIPTION	UNITS	YB	ADJ PRICE	RCN
+	WDK	N	WOOD DECK	557		25.57	14,242
+	BMU	N	BSMT UNFINISHED	1,032		43.65	45,046
+	BAS	L	BASE AREA	1,032	1986	229.78	237,137
D	BIG	N	BUILT-IN GARAGE	480		93.85	45,048
+	USF	L	UPPER STORY FIN	1,782	1986	124.45	221,769
	F31	O	FPL 3S 1OP	1		11,997.50	11,998
	FIX	O	XTRA FIXTURES	7		2,549.10	17,844
	GFP	O	GAS FIREPLACE	1		7,660.80	7,661
	KIT	O	EXTRA KITCHEN	1		6,012.50	6,013

TOTAL RCN	606,756

CONDITION ELEM	CD
EXTERIOR	G
INTERIOR	G
KITCHEN	G
BATHS	G
HEAT	U
ELECT	U

EFF.YR/AGE	2013 / 9	
COND	6 6 %	
FUNC	0	
ECON	0	
DEPR	6	% GD 94
RCNLD		$570,400