Key: 5653

Town of Bourne - Fiscal Year 2024

12/18/2023 6:02 pm SEQ #: 5,794

LEGAL

CURRENT OWNER	PARCEL ID	LOCATION
MOFFA JOHN S **310-A SHORE RD** **BOURNE, MA 02532**	**26.4-9-0**	**310-A SHORE RD**

TRANSFER HISTORY	DOS	T	SALE PRICE	BK-PG (Cert)
MOFFA JOHN S	11/19/2021	F	1	34680-132
MOFFA JOHN S	11/19/2021	F	1	34680-127
MOFFIA JOHN S	08/22/2017	QS	790,000	30714-270

CLASS	CLASS%	DESCRIPTION	BN ID	BN	CARD
1010	**100**	**SINGLE FAMILY**		**1**	**1 of 1**

PMT NO	PMT DT	TY	DESC	AMOUNT	INSP	BY	1st	%
0000		12	CYCLICAL		03/30/2017		100	100
970207	05/05/1997	3	ALT/RENO	50,000	03/02/1999	JS	100	100

LAND

CD	T	AC/SF/UN	Nbhd	Infl1	N_Index	ADJ BASE	SAF	Topo	Lpi	VC	CREDIT AMT	ADJ VALUE
100	S	39,000	9 1.00	100 1.00	100 1.00	659,960	1.02	A 1.00	BVG 2.80			601,510

TOTAL	38,986 SF	ZONING	1	FRNT	0

Nbhd	MO BCH
Infl1	AVG
N_Index	AVG

NOTE: great view of Back River & Phinneys Harbor; rocky beach

ASSESSED	CURRENT	PREVIOUS
LAND	601,500	532,400
BUILDING	611,000	540,700
DETACHED	1,300	1,300
OTHER	0	0
TOTAL	**1,213,800**	**1,074,400**

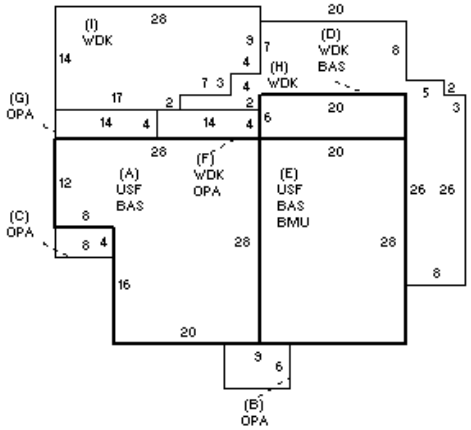

DETACHED

TY	QUAL	COND	DIM/NOTE	YB	UNITS	ADJ PRICE	RCNLD
SHF	A 1.00	A 0.75	9 X 12		108	16.42	1,300

PHOTO 03/12/2012

BLDG COMMENTS

BUILDING

BUILDING	CD	ADJ	DESC
MODEL	1		RESIDENTIAL
STYLE	5	1.00	COLONIAL [100%]
QUALITY	V	1.35	VERY GOOD [100%]
FRAME	1	1.00	WOOD FRAME [100%]

MEASURE	3/12/2012	TL
LIST	3/12/2012	EST
REVIEW	3/30/2017	DB

YEAR BLT	1974	SIZE ADJ	1.000
NET AREA	2,552	DETAIL ADJ	1.000
$NLA(RCN)	$269	OVERALL	1.060

CAPACITY	UNITS	ADJ
STORIES	2	1.00
ROOMS	9	1.00
BEDROOMS	4	1.00
BATHROOMS	2	1.00
FIXTURES	12	1.00
GARAGE CAPACITY	0	1.00
% BSMT FINISH	0	1.00
# OF HALF BATHS	1	1.00
# OF UNITS	1	1.00

ELEMENT	CD	DESCRIPTION	ADJ
FOUNDATION	3	FOUN. WALL	1.00
EXT COVER	1	WOOD SHINGLE	1.02
ROOF SHAPE	1	GABLE	1.00
ROOF COVER	1	ASPH/COMP SHIN	1.00
FLOOR COVER	1	HARDWOOD	1.02
INT. FINISH	2	DRYWALL	1.00
HEATING/COOLING	2	HOT WATER	1.02
FUEL SOURCE	2	GAS	1.00
USE	0		1.00

S	BAT	T	DESCRIPTION	UNITS	YB	ADJ PRICE	RCN
+	BAS	L	BASE AREA	1,336	1974	269.00	359,387
+	USF	L	UPPER STORY FIN	1,216	1974	148.78	180,914
+	OPA	N	OPEN PORCH	198		93.53	18,519
E	BMU	N	BSMT UNFINISHED	560		65.87	36,887
+	WDK	N	WOOD DECK	986		30.57	30,138
	F21	O	FPL 2S 1OP	1		12,605.70	12,606
	FIX	O	XTRA FIXTURES	7		3,047.41	21,332
	GFP	O	GAS FIREPLACE	1		9,158.40	9,158
	JAC	O	JACUZZI	1		17,572.70	17,573

TOTAL RCN	686,514

CONDITION ELEM	CD
EXTERIOR	G
INTERIOR	G
KITCHEN	V
BATHS	V
HEAT	A
ELECT	A

EFF.YR/AGE	2008 / 14	
COND	11 11 %	
FUNC	0	
ECON	0	
DEPR	11	% GD 89
RCNLD		$611,000