Key: 605

Town of Bourne - Fiscal Year 2024

12/18/2023 6:02 pm SEQ #: 604

LEGAL

CURRENT OWNER	PARCEL ID	LOCATION
HANNON WILLIAM J TRS WILLIAM J HANNON REVOCABLE TRUST 88 BUCHANAN RD WEST ROXBURY, MA 02132	4.2-7-0	223 STANDISH RD

TRANSFER HISTORY	DOS	T	SALE PRICE	BK-PG (Cert)
HANNON WILLIAM J TRS WILL	03/08/2017	F	1	30337-331
HANNON WILLIAM J TRS WILL	12/15/2016	F	1	30165-78
HANNON WILLIAM J &	06/24/2014	F		28223-131

CLASS	CLASS%	DESCRIPTION	BN ID	BN	CARD
1010	100	SINGLE FAMILY		1	1 of 1

PMT NO	PMT DT	TY	DESC	AMOUNT	INSP	BY	1st	%
		12	CYCLICAL		11/27/2017	BC	100	100
11523	09/19/2011	3	ALT/RENO	6,800			100	100
920227	05/20/1992	9	DECK	1,500	02/08/1993	JS	100	100

LAND

CD	T	AC/SF/UN	Nbhd	Infl1	N_Index	ADJ BASE	SAF	Topo	Lpi	VC	CREDIT AMT	ADJ VALUE
100	S	10,500	1 1.00	100 1.00	100 1.00	848,520	2.99	A 1.00	BVG 3.60			612,370

TOTAL	10,498 SF	ZONING	1	FRNT	94
Nbhd	N SAG	NOTE			
Infl1	AVG				
N_Index	AVG				

ASSESSED	CURRENT	PREVIOUS
LAND	612,400	542,000
BUILDING	272,100	240,900
DETACHED	0	0
OTHER	0	0
TOTAL	**884,500**	**782,900**

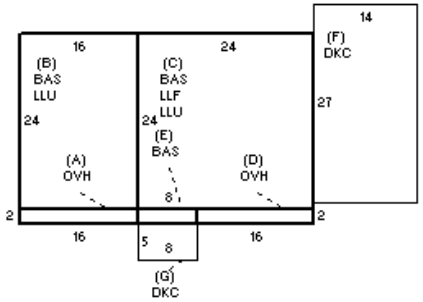

DETACHED

TY	QUAL	COND	DIM/NOTE	YB	UNITS	ADJ PRICE	RCNLD

PHOTO 11/27/2017

BLDG COMMENTS

BUILDING

BUILDING	CD	ADJ	DESC
MODEL	1		RESIDENTIAL
STYLE	2	1.00	RAISED RANCH [100%]
QUALITY	A	1.00	AVERAGE [100%]
FRAME	1	1.00	WOOD FRAME [100%]

MEASURE	1/14/2022	NMP
LIST	11/27/2017	EST
REVIEW	10/30/2018	DB

YEAR BLT	1977	SIZE ADJ	1.010
NET AREA	1,616	DETAIL ADJ	1.000
$NLA(RCN)	$213	OVERALL	1.060

CAPACITY	UNITS	ADJ
STORIES	1	1.00
ROOMS	5	1.00
BEDROOMS	2	1.00
BATHROOMS	2	1.00
FIXTURES	9	1.00
GARAGE CAPACITY	1	1.00
% BSMT FINISH	0	1.00
# OF HALF BATHS	0	1.00
# OF UNITS	1	1.00

ELEMENT	CD	DESCRIPTION	ADJ
FOUNDATION	4	FLR/WALL(FULL)	1.00
EXT COVER	1	WOOD SHINGLE	1.02
ROOF SHAPE	1	GABLE	1.00
ROOF COVER	1	ASPH/COMP SHIN	1.00
FLOOR COVER	1	HARDWOOD	1.02
INT. FINISH	2	DRYWALL	1.00
HEATING/COOLING	2	HOT WATER	1.02
FUEL SOURCE	1	OIL	1.00
USE	0		1.00

S	BAT	T	DESCRIPTION	UNITS	YB	ADJ PRICE	RCN
+	OVH	L	OVERHANG	64	1977	193.88	12,408
+	LLU	N	LOWER LEVEL UNF	960		34.30	32,928
C	LLF	L	LOWER LEVEL FIN	576	1977	66.06	38,051
+	BAS	L	BASE AREA	976	1977	212.30	207,209
+	DKC	N	DECK-COMPOSITE	418		67.22	28,099
	BMG	O	BSMT GARAGE	1		7,631.20	7,631
	F12	O	FPL 1S 2OP	1		9,014.50	9,015
	FIX	O	XTRA FIXTURES	4		2,279.85	9,119

TOTAL RCN	344,461

CONDITION ELEM	CD
EXTERIOR	G
INTERIOR	A
KITCHEN	A
BATHS	A
HEAT	A
ELECT	A

EFF.YR/AGE	1998 / 24		
COND	21	21 %	
FUNC	0		
ECON	0		
DEPR	21	% GD	79
RCNLD			$272,100