Key: 6110

Town of Bourne - Fiscal Year 2024

12/18/2023 6:02 pm SEQ #: 6,268

LEGAL

CURRENT OWNER	PARCEL ID	LOCATION
CURRAN PATRICK D TRS PATRICK D CURRAN 2012 TRUST 15 RIVER STREET UNIT 902 BOSTON, MA 02108	30.1-3-0	104 ROCKY POINT RD

TRANSFER HISTORY	DOS	T	SALE PRICE	BK-PG (Cert)
CURRAN PATRICK D TRS PATR	02/13/2020	F	100	(221859)
CURRAN PATRICK	08/25/2017	QS	2,195,000	(213864)
WHALEN JAMES M	01/26/2009	F		(152964)

CLASS	CLASS%	DESCRIPTION	BN ID	BN	CARD
1010	100	SINGLE FAMILY		1	1 of 1

PMT NO	PMT DT	TY	DESC	AMOUNT	INSP	BY	1st	%
EXB-23-417	07/10/2023	14	SOLAR	5,250			100	100
B-21-426	07/03/2023	2	ADDITIONS	75,000	06/06/2023	TL	18	42
EXB-23-247	04/28/2023	3	ALT/RENO	15,000			100	100
EXB-23-221	04/13/2023	3	ALT/RENO	15,000			75	0
B-22-386	01/31/2023	4	DETACH.STRUC	55,000	06/06/2023	TL	10	18

LAND

CD	T	AC/SF/UN	Nbhd	Infl1	N_Index	ADJ BASE	SAF	Topo	Lpi	VC	CREDIT AMT	ADJ VALUE
100	S	40,000	7 1.00	100 1.00	100 1.00	2,144,870	1.00	A 1.00	BSB 9.10			1,969,180

TOTAL	39,988 SF	ZONING	1	FRNT	0

Nbhd	GRAY GAB
Infl1	AVG
N_Index	AVG

NOTE

ASSESSED	CURRENT	PREVIOUS
LAND	1,969,200	1,742,800
BUILDING	649,300	669,500
DETACHED	14,400	2,000
OTHER	0	0
TOTAL	**2,632,900**	**2,414,300**

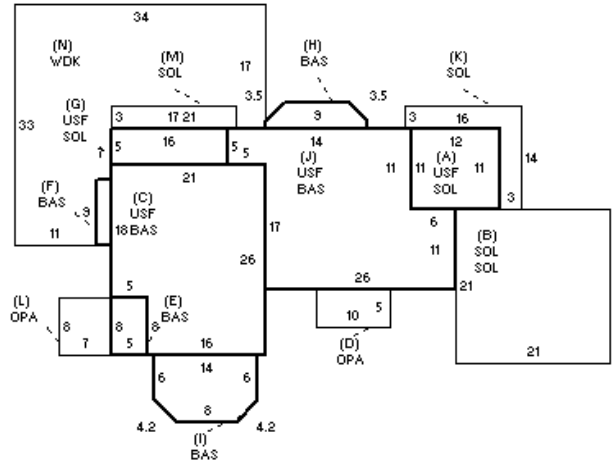

DETACHED

TY	QUAL	COND	DIM/NOTE	YB	UNITS	ADJ PRICE	RCNLD
SHF	A 1.00	10 0.90	10 X 14	2000	140	16.42	2,100
GUL	A 1.00	50 0.50	26 X 28	2023	728	33.80	12,300

PHOTO 06/06/2023

BLDG COMMENTS

BUILDING

BUILDING	CD	ADJ	DESC
MODEL	1		RESIDENTIAL
STYLE	7	1.00	CONVENTIONAL [100%]
QUALITY	G	1.10	GOOD [100%]
FRAME	1	1.00	WOOD FRAME [100%]

MEASURE	3/6/2023	EST
LIST	10/13/2017	TL
REVIEW	6/6/2023	TL

YEAR BLT	1900	SIZE ADJ	1.000
NET AREA	2,504	DETAIL ADJ	1.000
$NLA(RCN)	$259	OVERALL	1.080

CAPACITY	UNITS	ADJ
STORIES	2	1.00
ROOMS	8	1.00
BEDROOMS	4	1.00
BATHROOMS	3	1.00
FIXTURES	17	1.00
GARAGE CAPACITY	0	1.00
% BSMT FINISH	0	1.00
# OF HALF BATHS	1	1.00
# OF UNITS	1	1.00

ELEMENT	CD	DESCRIPTION	ADJ
FOUNDATION	3	FOUN. WALL	1.00
EXT COVER	1	WOOD SHINGLE	1.02
ROOF SHAPE	1	GABLE	1.00
ROOF COVER	2	WOOD SHINGLES	1.02
FLOOR COVER	1	HARDWOOD	1.02
INT. FINISH	1	PLASTER	1.00
HEATING/COOLING	2	HOT WATER	1.02
FUEL SOURCE	1	OIL	1.00
USE	0		1.00

S	BAT	T	DESCRIPTION	UNITS	YB	ADJ PRICE	RCN
A	SOL	N	SOLARIUM	132		122.01	16,106
+	USF	L	UPPER STORY FIN	1,249	1900	123.51	154,269
B	SOL	N	SOLARIUM	441		102.45	45,182
B	SOL	N	SOLARIUM	441		102.45	45,182
+	BAS	L	BASE AREA	1,255	1900	223.32	280,269
+	OPA	N	OPEN PORCH	106		81.51	8,640
G	SOL	N	SOLARIUM	80		130.16	10,413
K	SOL	N	SOLARIUM	81		130.17	10,544
M	SOL	N	SOLARIUM	51		130.17	6,639
N	WDK	N	WOOD DECK	768		25.38	19,488
	CPC	O	CAPE CELLAR	1		4,485.90	4,486
	F21	O	FPL 2S 1OP	1		10,465.10	10,465
	FIX	O	XTRA FIXTURES	12		2,529.94	30,359
	WPL	O	WHIRLPOOL	1		7,293.10	7,293

TOTAL RCN	649,335

CONDITION ELEM	CD
EXTERIOR	V
INTERIOR	V
KITCHEN	V
BATHS	V
HEAT	U
ELECT	U

EFF.YR/AGE	2021 / 1		
COND	1	1 %	
FUNC	0	uc	
ECON	0		
DEPR	0	% GD	100
RCNLD	$649,300		