Key: 644

Town of Bourne - Fiscal Year 2024

12/18/2023 6:02 pm SEQ #: 644

LEGAL

CURRENT OWNER	PARCEL ID	LOCATION
FAMA LEO A ETUX LISA A FAMA 20 APACHE TRAIL MEDFORD, MA 02155	4.3-43-0	25 LONGFELLOW RD

TRANSFER HISTORY	DOS	T	SALE PRICE	BK-PG (Cert)
FAMA LEO A ETUX	08/26/2002	N	150,000	15513-290
DELUCA SANDRA C	01/01/1987	QS	115,000	5810-229

CLASS	CLASS%	DESCRIPTION	BN ID	BN	CARD
1010	100	SINGLE FAMILY		1	1 of 1

PMT NO	PMT DT	TY	DESC	AMOUNT	INSP	BY	1st	%
19867	09/16/2019	4	DETACH.STRUC	4,000	12/20/2019		100	100
04398	06/04/2004	4	DETACH.STRUC	2,500	09/27/2006	DB	100	100

LAND

CD	T	AC/SF/UN	Nbhd	Infl1	N_Index	ADJ BASE	SAF	Topo	Lpi	VC	CREDIT AMT	ADJ VALUE
100	S	11,250	1 1.00	100 1.00	100 1.00	388,905	2.81	A 1.00	BAV 1.65			282,610

TOTAL	11,238 SF	ZONING	1	FRNT	75
Nbhd	N SAG	NOTE			
Infl1	AVG				
N_Index	AVG				

ASSESSED	CURRENT	PREVIOUS
LAND	282,600	250,100
BUILDING	175,300	155,200
DETACHED	0	0
OTHER	0	0
TOTAL	**457,900**	**405,300**

DETACHED

TY	QUAL	COND	DIM/NOTE	YB	UNITS	ADJ PRICE	RCNLD
SHF	A 1.00	10 0.90	7 X 11=NO VA	2019		0.00	

PHOTO 01/10/2018

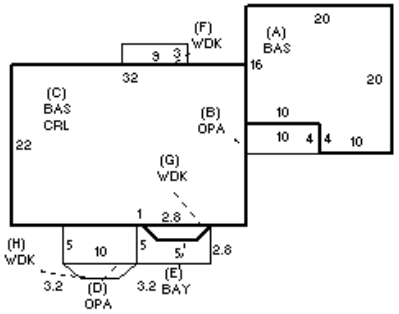

BLDG COMMENTS

BUILDING

BUILDING	CD	ADJ	DESC
MODEL	1		RESIDENTIAL
STYLE	1	0.95	RANCH [100%]
QUALITY	A	1.00	AVERAGE [100%]
FRAME	1	1.00	WOOD FRAME [100%]

MEASURE	7/20/2021	NMP
LIST	1/10/2018	EST
REVIEW		

YEAR BLT	1952	SIZE ADJ	1.015
NET AREA	1,078	DETAIL ADJ	1.000
$NLA(RCN)	$214	OVERALL	0.920

CAPACITY	UNITS	ADJ
STORIES	1	1.00
ROOMS	4	1.00
BEDROOMS	2	1.00
BATHROOMS	1	1.00
FIXTURES	7	1.00
GARAGE CAPACITY	0	1.00
% BSMT FINISH	0	1.00
# OF HALF BATHS	0	1.00
# OF UNITS	1	1.00

ELEMENT	CD	DESCRIPTION	ADJ
FOUNDATION	2	SLAB	0.95
EXT COVER	1	WOOD SHINGLE	1.02
ROOF SHAPE	1	GABLE	1.00
ROOF COVER	1	ASPH/COMP SHIN	1.00
FLOOR COVER	1	HARDWOOD	1.02
INT. FINISH	2	DRYWALL	1.00
HEATING/COOLING	5	ELECTRIC BB	0.98
FUEL SOURCE	3	ELECTRIC	1.00
USE	0		1.00

S	BAT	T	DESCRIPTION	UNITS	YB	ADJ PRICE	RCN
A	BAS	L	BASE AREA	360	1952	179.26	64,533
+	OPA	N	OPEN PORCH	90		67.11	6,040
C	CRL	N	BSMT CRAWL	704		23.99	16,888
C	BAS	L	BASE AREA	704	1952	179.26	126,198
E	BAY	L	BAYWINDOW	14	1952	169.09	2,367
+	WDK	N	WOOD DECK	78		41.09	3,205
	F11	O	FPL 1S 1OP	1		7,487.20	7,487
	FIX	O	XTRA FIXTURES	2		1,988.55	3,977

TOTAL RCN	230,695

CONDITION ELEM	CD
EXTERIOR	A
INTERIOR	A
KITCHEN	A
BATHS	A
HEAT	A
ELECT	A

EFF.YR/AGE	1995 / 27	
COND	24	24 %
FUNC	0	
ECON	0	
DEPR	24	% GD 76
RCNLD		$175,300