Key: 6515

Town of Bourne - Fiscal Year 2024

12/18/2023 6:02 pm SEQ #: 6,675

LEGAL

CURRENT OWNER	PARCEL ID	LOCATION
SHEEHY EDWARD &	30.4-199-0	22 BAYVIEW AVE
CHARLOTTE MALIFF		
19 COLT RD		
FRANKLIN, MA 02038		

TRANSFER HISTORY	DOS	T	SALE PRICE	BK-PG (Cert)
SHEEHY EDWARD &	10/03/2022	QS	620,000	35404-12
BOISVERT DARREN ETUX	08/30/2016	F	100	29897-175
BOISVERT ANGEL R	08/30/2016	QS	345,000	29897-158

CLASS	CLASS%	DESCRIPTION	BN ID	BN	CARD
1010	100	SINGLE FAMILY		1	1 of 1

PMT NO	PMT DT	TY	DESC	AMOUNT	INSP	BY	1st	%
EXB-23-803	11/28/2023	14	SOLAR	8,019			100	100
		3	ALT/RENO		05/04/2023	TL	100	100

LAND

CD	T	AC/SF/UN	Nbhd	Infl1	N_Index	ADJ BASE	SAF	Topo	Lpi	VC	CREDIT AMT	ADJ VALUE
100	S	6,400	9 1.00	100 1.00	100 1.00	294,625	4.73	A 1.00	BA+ 1.25			204,590

TOTAL	6,403 SF	ZONING	1	FRNT	0
Nbhd	MO BCH	NOTE			
Infl1	AVG				
N_Index	AVG				

ASSESSED	CURRENT	PREVIOUS
LAND	204,600	181,100
BUILDING	337,400	263,900
DETACHED	2,500	2,200
OTHER	0	0
TOTAL	**544,500**	**447,200**

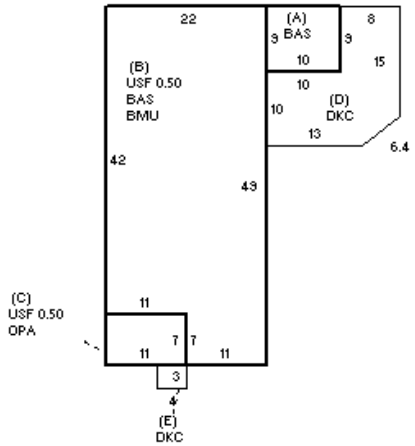

DETACHED

TY	QUAL	COND	DIM/NOTE	YB	UNITS	ADJ PRICE	RCNLD
SHF	G 1.20	10 0.90	8X8 + 6X13		142	19.71	2,500

PHOTO 05/04/2023

BLDG COMMENTS

BUILDING

BUILDING	CD	ADJ	DESC
MODEL	1		RESIDENTIAL
STYLE	7	1.00	CONVENTIONAL [100%]
QUALITY	A	1.00	AVERAGE [100%]
FRAME	1	1.00	WOOD FRAME [100%]

MEASURE	7/15/2014	JB
LIST	7/15/2014	JB
REVIEW	9/15/2017	MR

YEAR BLT	1930	SIZE ADJ	1.010
NET AREA	1,630	DETAIL ADJ	1.000
$NLA(RCN)	$225	OVERALL	1.090

CAPACITY	UNITS	ADJ
STORIES	1.5	1.00
ROOMS	6	1.00
BEDROOMS	3	1.00
BATHROOMS	2	1.00
FIXTURES	8	1.00
GARAGE CAPACITY	0	1.00
% BSMT FINISH	0	1.00
# OF HALF BATHS	0	1.00
# OF UNITS	1	1.00

ELEMENT	CD	DESCRIPTION	ADJ
FOUNDATION	3	FOUN. WALL	1.00
EXT COVER	1	WOOD SHINGLE	1.02
ROOF SHAPE	2	HIP	1.02
ROOF COVER	1	ASPH/COMP SHIN	1.00
FLOOR COVER	1	HARDWOOD	1.02
INT. FINISH	2	DRYWALL	1.00
HEATING/COOLING	9	WARM-COOL AIR	1.03
FUEL SOURCE	2	GAS	1.00
USE	0		1.00

S	BAT	T	DESCRIPTION	UNITS	YB	ADJ PRICE	RCN
+	BAS	L	BASE AREA	1,091	1930	211.34	230,567
B	BMU	N	BSMT UNFINISHED	1,001		40.14	40,184
+	USF	L	UPPER STORY FIN	539	1930	121.14	65,292
C	OPA	N	OPEN PORCH	77		79.12	6,092
+	DKC	N	DECK-COMPOSITE	254		69.12	17,557
	FIX	O	XTRA FIXTURES	3		2,344.57	7,034

TOTAL RCN	366,727

CONDITION ELEM	CD
EXTERIOR	G
INTERIOR	G
KITCHEN	G
BATHS	G
HEAT	U
ELECT	U

EFF.YR/AGE	2011 / 11	
COND	8 8 %	
FUNC	0	
ECON	0	
DEPR	8	% GD 92
RCNLD		$337,400