Key: 6586

Town of Bourne - Fiscal Year 2024

12/18/2023 6:02 pm SEQ #: 6,749

LEGAL

CURRENT OWNER	PARCEL ID	LOCATION
KEYES MICHAEL F ETUX MICHELLE J KEYES 56 STELLA RD BELMONT, MA 02478	30.4-283-0	1 GAFFIELD AVE

TRANSFER HISTORY	DOS	T	SALE PRICE	BK-PG (Cert)
KEYES MICHAEL F ETUX	09/20/2016	F	100	29944-311
CHARLESFIELD LLC	07/07/2014	F	100	28249-99
KEYES MICHAEL F ETUX	02/14/2014	N		27987-272+73

CLASS	CLASS%	DESCRIPTION	BN ID	BN	CARD
1010	100	SINGLE FAMILY		1	1 of 2

PMT NO	PMT DT	TY	DESC	AMOUNT	INSP	BY	1st	%
B-22-376	01/19/2023	8	POOL	100,000	06/28/2023	SL	100	100
B-22-171	01/19/2022	2	ADDITIONS	100,000	06/28/2023	SL	100	100
17172	03/14/2017	3	ALT/RENO	10,000	05/01/2018	TL	100	100
		12	CYCLICAL		08/26/2016		100	100
14119	03/04/2014	3	ALT/RENO	5,200	07/02/2014		100	100

LAND

CD	T	AC/SF/UN	Nbhd	Infl1	N Index	ADJ BASE	SAF	Topo	Lpi	VC	CREDIT AMT	ADJ VALUE
100	S	19,296	9 1.00	100 1.00	100 1.00	294,625	1.76	A 1.00	BA+ 1.25			229,880

TOTAL	19,296 SF	ZONING	1	FRNT	0

Nbhd	MO BCH
Infl1	AVG
N_Index	AVG

NOTE: Views of Phinney's Harbor, Monument Beach & the marina

ASSESSED	CURRENT	PREVIOUS
LAND	229,900	203,500
BUILDING	488,300	441,000
DETACHED	36,400	0
OTHER	107,300	0
TOTAL	**861,900**	**644,500**

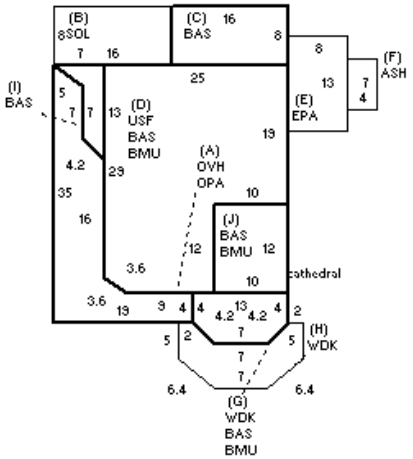

DETACHED

TY	QUAL	COND	DIM/NOTE	YB	UNITS	ADJ PRICE	RCNLD
IPG	E 1.90	10 0.90	16 X 36	2023	576	53.02	27,500
PTD	E 1.90	10 0.90	32 X 64	2023	1,472	6.70	8,900

PHOTO 06/28/2023

BLDG COMMENTS

BUILDING

BUILDING	CD	ADJ	DESC
MODEL	1		RESIDENTIAL
STYLE	9	1.20	ANTIQUE [100%]
QUALITY	+	1.05	AVERAGE + [100%]
FRAME	1	1.00	WOOD FRAME [100%]

MEASURE	4/5/2017	TL
LIST	4/5/2017	EST
REVIEW	6/28/2023	SL

YEAR BLT	1897	SIZE ADJ	1.010
NET AREA	1,931	DETAIL ADJ	1.000
$NLA(RCN)	$281	OVERALL	1.260

CAPACITY	UNITS	ADJ
STORIES	2	1.00
ROOMS	9	1.00
BEDROOMS	4	1.00
BATHROOMS	1	1.00
FIXTURES	9	1.00
GARAGE CAPACITY	0	1.00
% BSMT FINISH	0	1.00
# OF HALF BATHS	1	1.00
# OF UNITS	1	1.00

ELEMENT	CD	DESCRIPTION	ADJ
FOUNDATION	4	FLR/WALL(FULL)	1.00
EXT COVER	1	WOOD SHINGLE	1.02
ROOF SHAPE	3	GAMBREL	1.00
ROOF COVER	1	ASPH/COMP SHIN	1.00
FLOOR COVER	1	HARDWOOD	1.02
INT. FINISH	2	DRYWALL	1.00
HEATING/COOLING	2	HOT WATER	1.02
FUEL SOURCE	2	GAS	1.00
USE	0		1.00

S	BAT	T	DESCRIPTION	UNITS	YB	ADJ PRICE	RCN
A	OPA	N	OPEN PORCH	256		78.64	20,132
A	OVH	L	OVERHANG	256	1897	241.99	61,950
B	SOL	N	SOLARIUM	128		137.24	17,566
+	BAS	L	BASE AREA	1,023	1897	256.51	262,410
+	BMU	N	BSMT UNFINISHED	854		48.73	41,612
D	USF	L	UPPER STORY FIN	652	1897	145.29	94,731
E	EPA	N	ENCLOSED PORCH	104		109.93	11,433
F	ASH	N	ATT SHED	28		33.21	930
+	WDK	N	WOOD DECK	185		46.74	8,647
	F21	O	FPL 2S 1OP	1		11,770.90	11,771
	FIX	O	XTRA FIXTURES	4		2,845.50	11,382

TOTAL RCN	542,563

CONDITION ELEM	CD
EXTERIOR	A
INTERIOR	G
KITCHEN	G
BATHS	G
HEAT	U
ELECT	U

EFF.YR/AGE	2009 / 13	
COND	10	10 %
FUNC	0	
ECON	0	
DEPR	10	% GD 90
RCNLD		$488,300

Key: 6586

Town of Bourne - Fiscal Year 2024

12/18/2023 6:02 pm SEQ #: 6.750

LEGAL

CURRENT OWNER	PARCEL ID	LOCATION
KEYES MICHAEL F ETUX MICHELLE J KEYES 56 STELLA RD BELMONT, MA 02478	30.4-283-0	1 GAFFIELD AVE

TRANSFER HISTORY	DOS	T	SALE PRICE	BK-PG (Cert)

CLASS	CLASS%	DESCRIPTION	BN ID	BN	CARD
1010	100	SINGLE FAMILY		2	2 of 2

PMT NO	PMT DT	TY	DESC	AMOUNT	INSP	BY	1st	%

LAND

CD	T	AC/SF/UN	Nbhd	Infl1	N Index	ADJ BASE	SAF	Topo	Lpi	VC	CREDIT AMT	ADJ VALUE

TOTAL		ZONING		FRNT	
Nbhd		NOTE			
Infl1					
N_Index					

ASSESSED	CURRENT	PREVIOUS
LAND		
BUILDING	107,300	
DETACHED		
OTHER		
TOTAL		

DETACHED

TY	QUAL	COND	DIM/NOTE	YB	UNITS	ADJ PRICE	RCNLD

PHOTO 06/28/2023

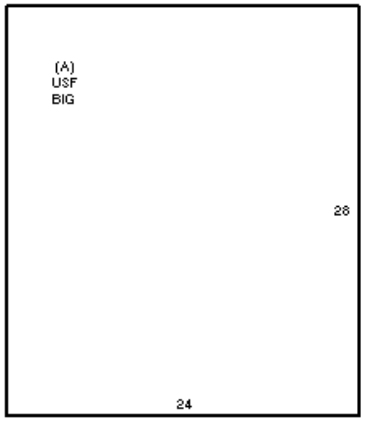

BLDG COMMENTS

BUILDING

BUILDING	CD	ADJ	DESC
MODEL	1		RESIDENTIAL
STYLE	20	0.75	GARAGE W/QTRS [100%]
QUALITY	G	1.10	GOOD [100%]
FRAME	1	1.00	WOOD FRAME [100%]

MEASURE	6/28/2023	SL
LIST	6/28/2023	EST
REVIEW	7/6/2023	TL

YEAR BLT	2023	SIZE ADJ	1.020
NET AREA	672	DETAIL ADJ	1.000
$NLA(RCN)	$160	OVERALL	0.780

CAPACITY	UNITS	ADJ
STORIES	1	1.00
ROOMS	1	1.00
BEDROOMS	1	1.00
BATHROOMS	0	1.00
FIXTURES	3	1.00
GARAGE CAPACITY	2	1.00
% BSMT FINISH	0	1.00
# OF HALF BATHS	1	1.00
# OF UNITS	0	1.00

ELEMENT	CD	DESCRIPTION	ADJ
FOUNDATION	2	SLAB	0.95
EXT COVER	1	WOOD SHINGLE	1.02
ROOF SHAPE	1	GABLE	1.00
ROOF COVER	1	ASPH/COMP SHIN	1.00
FLOOR COVER	1	HARDWOOD	1.02
INT. FINISH	2	DRYWALL	1.00
HEATING/COOLING	8	HEAT PUMP	1.04
FUEL SOURCE	3	ELECTRIC	1.00
USE	0		1.00

S	BAT	T	DESCRIPTION	UNITS	YB	ADJ PRICE	RCN
A	BIG	N	BUILT-IN GARAGE	672		64.54	43,372
A	USF	L	UPPER STORY FIN	672	2023	95.16	63,947

TOTAL RCN	107,319

CONDITION ELEM	CD
EXTERIOR	A
INTERIOR	A
KITCHEN	A
BATHS	A
HEAT	A
ELECT	A

EFF.YR/AGE	2022 / 0		
COND	0	0 %	
FUNC	0		
ECON	0		
DEPR	0	% GD	100
RCNLD			$107,300