Key: 659

Town of Bourne - Fiscal Year 2024

12/18/2023 6:02 pm SEQ #: 659

LEGAL

CURRENT OWNER	PARCEL ID	LOCATION
TUCKER THOMAS W & MARY D TRS THE 406 WILLISTON ROAD RLTY TR P.O. BOX 163 SAGAMORE BEACH, MA 02562	4.3-64-0	406 WILLISTON RD

TRANSFER HISTORY	DOS	T	SALE PRICE	BK-PG (Cert)
TUCKER THOMAS W & MARY D	03/26/2018	F	100	31159-337
TUCKER THOMAS W &	06/30/1997	QS	275,000	10828-66

CLASS	CLASS%	DESCRIPTION	BN ID	BN	CARD
1010	100	SINGLE FAMILY		1	1 of 1

PMT NO	PMT DT	TY	DESC	AMOUNT	INSP	BY	1st	%
B-21-109	05/14/2021	2	ADDITIONS	125,000	04/14/2022	TL	100	100
13476	07/24/2013	2	ADDITIONS	220,000			100	100

LAND

CD	T	AC/SF/UN	Nbhd	Infl1	N_Index	ADJ BASE	SAF	Topo	Lpi	VC	CREDIT AMT	ADJ VALUE
100	S	37,500	1 1.00	100 1.00	100 1.00	388,905	1.05	A 1.00	BAV 1.65			350,570

TOTAL	37,505 SF	ZONING	1	FRNT	150
Nbhd	N SAG	NOTE			
Infl1	AVG				
N_Index	AVG				

ASSESSED	CURRENT	PREVIOUS
LAND	350,600	310,300
BUILDING	771,900	683,100
DETACHED	2,000	1,900
OTHER	0	0
TOTAL	**1,124,500**	**995,300**

DETACHED

TY	QUAL	COND	DIM/NOTE	YB	UNITS	ADJ PRICE	RCNLD
HTB	A 1.00	30 0.70			1	2,826.30	2,000

PHOTO 02/05/2018

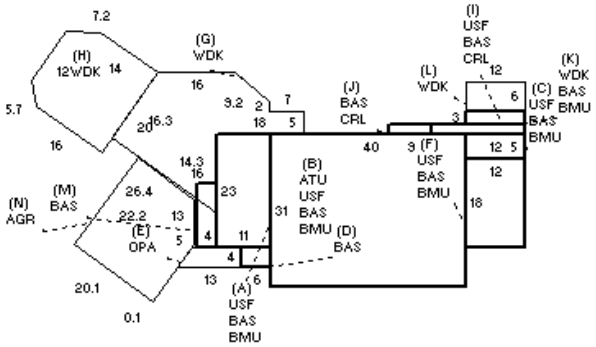

BLDG COMMENTS

BUILDING

BUILDING	CD	ADJ	DESC
MODEL	1		RESIDENTIAL
STYLE	5	1.00	COLONIAL [100%]
QUALITY	G	1.10	GOOD [100%]
FRAME	1	1.00	WOOD FRAME [100%]

MEASURE	1/21/2022	NMP
LIST	4/14/2022	EST
REVIEW	4/14/2022	TL

YEAR BLT	1944	SIZE ADJ	0.990
NET AREA	3,744	DETAIL ADJ	1.000
$NLA(RCN)	$224	OVERALL	1.060

CAPACITY	UNITS	ADJ
STORIES	2	1.00
ROOMS	11	1.00
BEDROOMS	4	1.00
BATHROOMS	3	1.00
FIXTURES	15	1.00
GARAGE CAPACITY	2	1.00
% BSMT FINISH	0	1.00
# OF HALF BATHS	1	1.00
# OF UNITS	1	1.00

ELEMENT	CD	DESCRIPTION	ADJ
FOUNDATION	4	FLR/WALL(FULL)	1.00
EXT COVER	1	WOOD SHINGLE	1.02
ROOF SHAPE	1	GABLE	1.00
ROOF COVER	1	ASPH/COMP SHIN	1.00
FLOOR COVER	1	HARDWOOD	1.02
INT. FINISH	1	PLASTER	1.00
HEATING/COOLING	2	HOT WATER	1.02
FUEL SOURCE	2	GAS	1.00
USE	0		1.00

S	BAT	T	DESCRIPTION	UNITS	YB	ADJ PRICE	RCN
+	BMU	N	BSMT UNFINISHED	1,805		34.23	61,783
+	USF	L	UPPER STORY FIN	1,709	1944	120.01	205,104
B	ATU	N	ATTIC UNF	1,240		46.10	57,164
+	BAS	L	BASE AREA	152	2013	204.45	31,077
+	USF	L	UPPER STORY FIN	98	2013	120.02	11,762
+	BAS	L	BASE AREA	1,733	1944	204.45	354,315
E	OPA	N	OPEN PORCH	46		94.05	4,327
+	WDK	N	WOOD DECK	1,034		24.66	25,495
+	CRL	N	BSMT CRAWL	56		39.54	2,214
M	BAS	L	BASE AREA	52	2021	204.45	10,632
N	AGR	N	ATT GARAGE	411		71.34	29,323
	F21	O	FPL 2S 1OP	1		10,168.60	10,169
	F23	O	FPL 2S 3OP	1		11,107.10	11,107
	FIX	O	XTRA FIXTURES	10		2,458.28	24,583

TOTAL RCN	839,053

CONDITION ELEM	CD
EXTERIOR	A
INTERIOR	G
KITCHEN	G
BATHS	G
HEAT	U
ELECT	U

EFF.YR/AGE	2011 / 11	
COND	8 8 %	
FUNC	0	
ECON	0	
DEPR	8	% GD 92
RCNLD		$771,900