Key: 6706

Town of Bourne - Fiscal Year 2024

12/18/2023 6:02 pm SEQ #: 6,874

LEGAL

CURRENT OWNER	PARCEL ID	LOCATION
MARK JOSHUA B **35 SHAKER DR** **BOURNE, MA 02532**	**31.0-60-0**	**35 SHAKER DR**

TRANSFER HISTORY	DOS	T	SALE PRICE	BK-PG (Cert)
MARK JOSHUA B	11/30/2011	F	1	25879-340
MARK JOSHUA B &	06/23/2011	QS	358,000	25524-198
KEENAN JONATHAN	03/21/2007	QS	480,000	21868-117

CLASS	CLASS%	DESCRIPTION	BN ID	BN	CARD
1010	**100**	**SINGLE FAMILY**		**1**	**1 of 1**

PMT NO	PMT DT	TY	DESC	AMOUNT	INSP	BY	1st	%
17501	06/29/2017	3	ALT/RENO	9,000	05/22/2018		100	100
960604	12/13/1996	1	NEW CONSTRUC	120,000	02/08/1998	JS	100	100

LAND

CD	T	AC/SF/UN	Nbhd	Infl1	N_Index	ADJ BASE	SAF	Topo	Lpi	VC	CREDIT AMT	ADJ VALUE
100	S	15,000	9 1.00	100 1.00	100 1.00	259,270	2.18	A 1.00	R06 1.10			194,880

TOTAL	14,985 SF	ZONING	1	FRNT	0
Nbhd	MO BCH	NOTE			
Infl1	AVG				
N_Index	AVG				

ASSESSED	CURRENT	PREVIOUS
LAND	194,900	172,500
BUILDING	517,700	463,500
DETACHED	0	0
OTHER	0	0
TOTAL	**712,600**	**636,000**

DETACHED

TY	QUAL	COND	DIM/NOTE	YB	UNITS	ADJ PRICE	RCNLD

PHOTO 12/31/2002

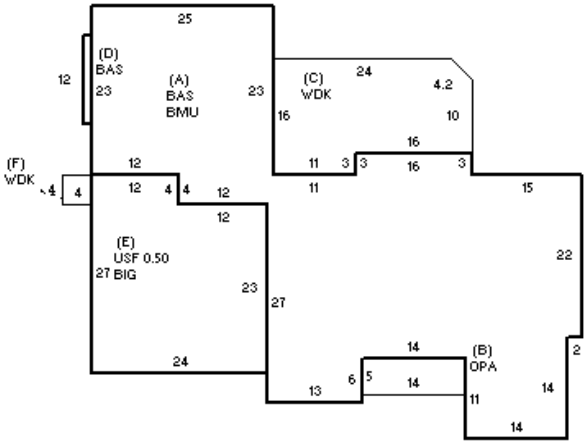

BUILDING

BUILDING	CD	ADJ	DESC
MODEL	1		RESIDENTIAL
STYLE	8	1.10	CONTEMPORARY [100%]
QUALITY	A	1.00	AVERAGE [100%]
FRAME	1	1.00	WOOD FRAME [100%]

MEASURE	7/24/2012	DB
LIST	7/24/2012	EST
REVIEW	5/22/2018	TL

BLDG COMMENTS

YEAR BLT	1997	SIZE ADJ	1.005
NET AREA	2,284	DETAIL ADJ	1.000
$NLA(RCN)	$267	OVERALL	1.160

CAPACITY	UNITS	ADJ
STORIES	1	1.00
ROOMS	7	1.00
BEDROOMS	4	1.00
BATHROOMS	2	1.00
FIXTURES	10	1.00
GARAGE CAPACITY	2	1.00
% BSMT FINISH	0	1.00
# OF HALF BATHS	1	1.00
# OF UNITS	1	1.00

ELEMENT	CD	DESCRIPTION	ADJ
FOUNDATION	4	FLR/WALL(FULL)	1.00
EXT COVER	1	WOOD SHINGLE	1.02
ROOF SHAPE	1	GABLE	1.00
ROOF COVER	1	ASPH/COMP SHIN	1.00
FLOOR COVER	1	HARDWOOD	1.02
INT. FINISH	2	DRYWALL	1.00
HEATING/COOLING	2	HOT WATER	1.02
FUEL SOURCE	2	GAS	1.00
USE	0		1.00

S	BAT	T	DESCRIPTION	UNITS	YB	ADJ PRICE	RCN
A	BMU	N	BSMT UNFINISHED	1,972		34.57	68,169
B	OPA	N	OPEN PORCH	70		89.35	6,255
+	WDK	N	WOOD DECK	396		24.90	9,862
+	BAS	L	BASE AREA	1,984	1997	206.48	409,660
E	BIG	N	BUILT-IN GARAGE	600		91.40	54,843
E	USF	L	UPPER STORY FIN	300	1997	128.28	38,483
	F11	O	FPL 1S 1OP	1		9,347.40	9,347
	FIX	O	XTRA FIXTURES	5		2,482.68	12,413

TOTAL RCN	609,031
CONDITION ELEM	CD
EXTERIOR	A
INTERIOR	A
KITCHEN	G
BATHS	G
HEAT	A
ELECT	A
EFF.YR/AGE	2004 / 18
COND	15 15 %
FUNC	0
ECON	0
DEPR	15 % GD 85
RCNLD	$517,700